Product datasheet

Specifications

discrete input module Modicon Momentum - 16 Input 100..120 V AC

170ADI54050

Main

Range Of Product	Modicon Momentum automation platform
Product Or Component Type	Discrete inputs base AC
Group Of Channels	2 groups of 8 inputs
Discrete Input Number	16 conforming to IEC 1131-2 Type 2
Discrete Input Voltage	120 V AC
Protective Treatment	TC

Complementary

Discrete Input Logic	Positive
Input Voltage Limits	85...132 V
Network Frequency	47...63 Hz
Voltage Range	0...132 V
Voltage State 0 Guaranteed	<= 20 V
Voltage State 1 Guaranteed	>= 74 V
Current State 0 Guaranteed	<= 2 mA
Current State 1 Guaranteed	>= 10 mA
Input Resistance	7.5 kOhm 60 Hz 9.5 kOhm 50 Hz
Response Time	10 ms 60 Hz from state 0 to state 1 35 ms 60 Hz from state 1 to state 0
Isolation Between Group	1780 V AC
Isolation Between Channels And Bus	1780 V AC
Terminals Description Plc N°1	(N)PW (5)IN_DIS#5 (13)IN_DIS#13 (15)IN_DIS#15 (12)IN_DIS#12 (10)IN_DIS#10 (14)IN_DIS#14 (11)IN_DIS#11 (9)IN_DIS#9 (7)IN_DIS#7 (L1)PW (1)IN_DIS#1 (8)IN_DIS#8 (2)IN_DIS#2 (6)IN_DIS#6 (16)IN_DIS#16 (3)IN_DIS#3 TB (4)IN_DIS#4

Excluding VAT, FCA Jabal Ali & are subject to change – check with your local distributor.

Disclaimer: This documentation is not intended as a substitute for and is not to be used for determining suitability or reliability of these products for specific user applications

Marking	CE
Local Signalling	16 LEDs for channel status
Current Consumption	<= 125 mA at 120 V AC
Depth	47.5 mm
Height	141.5 mm
Width	125 mm
Net Weight	0.284 kg

Environment

Product Certifications	UL FM Class 1 Division 2 CSA
Resistance To Electrostatic Discharge	4 kV contact conforming to IEC 801-2 8 kV on air conforming to IEC 801-2
Resistance To Electromagnetic Fields	10 V/m 80...1000 MHz conforming to IEC 801-3
Ambient Air Temperature For Operation	0…60 °C
Ambient Air Temperature For Storage	-40…85 °C
Relative Humidity	95 % without condensation
Operating Altitude	<= 5000 m

Packing Units

Unit Type Of Package 1	PCE
Number Of Units In Package 1	1
Package 1 Height	9.0 cm
Package 1 Width	18.0 cm
Package 1 Length	26.0 cm
Package 1 Weight	501.0 g
Unit Type Of Package 2	S04
Number Of Units In Package 2	12
Package 2 Height	30 cm
Package 2 Width	40 cm
Package 2 Length	60 cm
Package 2 Weight	7.182 kg
Unit Type Of Package 3	P06
Number Of Units In Package 3	48
Package 3 Height	75.0 cm
Package 3 Width	40.0 cm
Package 3 Length	80.0 cm
Package 3 Weight	46 kg

Contractual warranty

Warranty	18 months

Sustainability

Green Premium™ label is Schneider Electric's commitment to delivering products with best-in-class environmental performance. Green Premium promises compliance with the latest regulations, transparency on environmental impacts, as well as circular and low-CO_2 products.

Guide to assessing product sustainability is a white paper that clarifies global eco-label standards and how to interpret environmental declarations.

Learn more about Green Premium >

Guide to assess a product's sustainability >

Transparency RoHS/REACh

Well-being performance

Mercury Free

Rohs Exemption Information	Yes

Certifications & Standards

Reach Regulation	REACh Declaration
Eu Rohs Directive	Pro-active compliance (Product out of EU RoHS legal scope)
China Rohs Regulation	China RoHS declaration
Environmental Disclosure	Product Environmental Profile
Weee	The product must be disposed on European Union markets following specific waste collection and never end up in rubbish bins
Circularity Profile	End of Life Information

Dimensions Drawings

Standard Adapter on a Discrete VAC Base

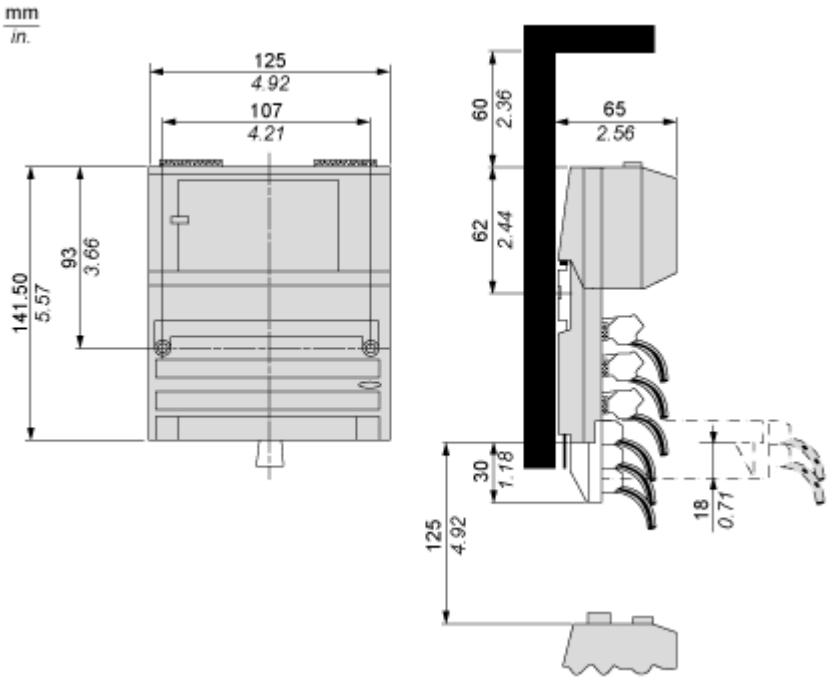

Mounting and Clearance

Mounting on a Wall

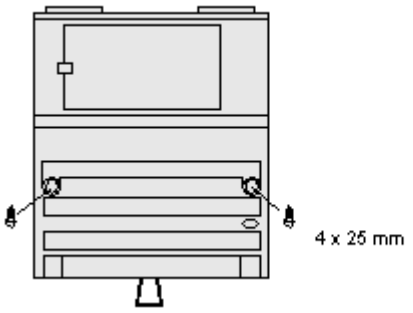

Connections and Schema

External Wiring Diagrams

2-Wire Devices

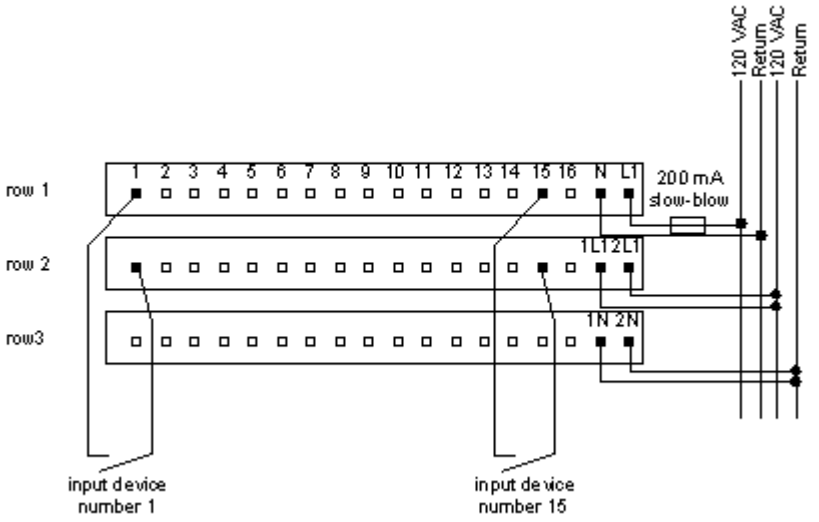

3-Wire Device

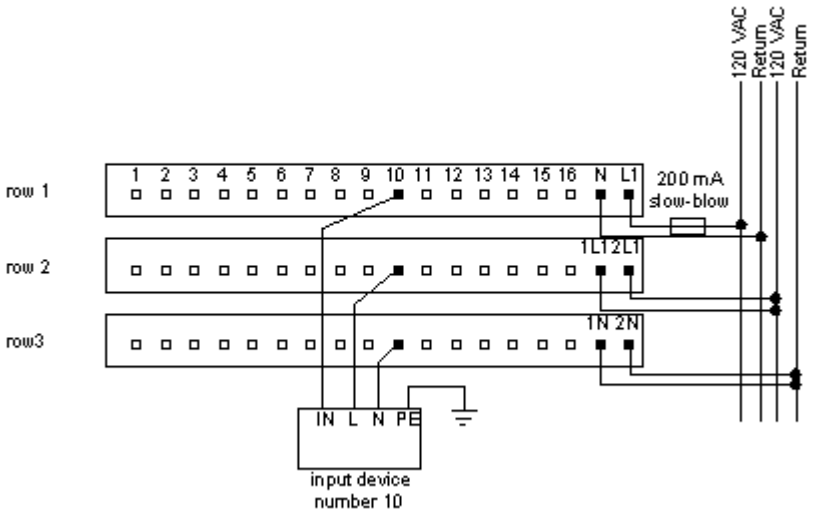
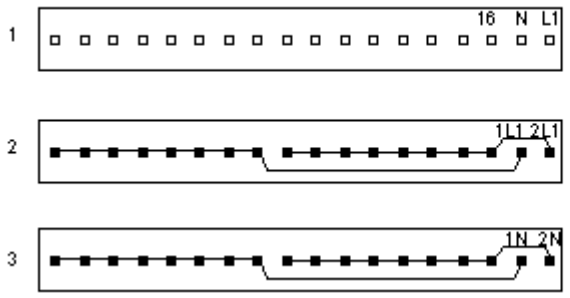
Internal Pin Connections