Product datasheet

Specifications

Green Premium™

discrete input module Modicon Momentum - 16 Input 200..240 V AC

170ADI74050

Discontinued on: 20 Jun 2023

Discontinued

Main

Range Of Product	Modicon Momentum automation platform
Product Or Component Type	Discrete inputs base AC
Group Of Channels	2 groups of 8 inputs
Discrete Input Number	16 conforming to IEC 1131-2 Type 2
Discrete Input Voltage	230 V AC
Protective Treatment	TC

Complementary

Discrete Input Logic	Positive
Input Voltage Limits	164...253 V
Network Frequency	47...63 Hz
Voltage Range	163...253 V
Voltage State 0 Guaranteed	<= 40 V
Voltage State 1 Guaranteed	>= 164 V
Current State 0 Guaranteed	<= 2 mA
Current State 1 Guaranteed	>= 10 mA
Input Resistance	7.5 kOhm 60 Hz 9 kOhm 50 Hz
Response Time	13.3 ms 60 Hz from state 0 to state 1 13.3 ms 60 Hz from state 1 to state 0
Isolation Between Group	1780 V AC
Isolation Between Channels And Bus	1780 V AC

Disclaimer: This documentation is not intended as a substitute for and is not to be used for determining suitability or reliability of these products for specific user applications

Excluding VAT, FCA Jabal Ali & are subject to change – check with your local distributor.

Terminals Description Plc N°1	(8)IN_DIS#8 (7)IN_DIS#7 (5)IN_DIS#5 (16)IN_DIS#16 (12)IN_DIS#12 (2)IN_DIS#2 (14)IN_DIS#14 (15)IN_DIS#15 (N)PW (11)IN_DIS#11 (4)IN_DIS#4 (9)IN_DIS#9 (L1)PW (3)IN_DIS#3 (6)IN_DIS#6 TB (13)IN_DIS#13 (1)IN_DIS#1 (10)IN_DIS#10
Marking	CE
Local Signalling	16 LEDs for channel status
Current Consumption	<= 125 mA at 230 V AC
Depth	47.5 mm
Height	141.5 mm
Width	125 mm
Net Weight	0.284 kg

Environment

Product Certifications	CSA UL
Resistance To Electrostatic Discharge	4 kV contact conforming to IEC 801-2 8 kV on air conforming to IEC 801-2
Resistance To Electromagnetic Fields	10 V/m 80...1000 MHz conforming to IEC 801-3
Ambient Air Temperature For Operation	0…60 °C
Ambient Air Temperature For Storage	-40…85 °C
Relative Humidity	95 % without condensation
Operating Altitude	<= 5000 m

Packing Units

Unit Type Of Package 1	PCE
Number Of Units In Package 1	1
Package 1 Height	9.0 cm
Package 1 Width	18.0 cm
Package 1 Length	26.0 cm
Package 1 Weight	465.0 g
Unit Type Of Package 2	P06
Number Of Units In Package 2	80
Package 2 Height	105.0 cm
Package 2 Width	80.0 cm
Package 2 Length	80.0 cm
Package 2 Weight	45.7 kg

Contractual warranty

Warranty	18 months

Sustainability

Green Premium™ label is Schneider Electric's commitment to delivering products with best-in-class environmental performance. Green Premium promises compliance with the latest regulations, transparency on environmental impacts, as well as circular and low-CO_2 products.

Guide to assessing product sustainability is a white paper that clarifies global eco-label standards and how to interpret environmental declarations.

Learn more about Green Premium >

Guide to assess a product's sustainability >

Transparency RoHS/REACh

Well-being performance

Mercury Free

Rohs Exemption Information	Yes

Certifications & Standards

Reach Regulation	REACh Declaration
Eu Rohs Directive	Pro-active compliance (Product out of EU RoHS legal scope)
China Rohs Regulation	China RoHS declaration
Environmental Disclosure	Product Environmental Profile
Weee	The product must be disposed on European Union markets following specific waste collection and never end up in rubbish bins
Circularity Profile	End of Life Information

Dimensions Drawings

Standard Adapter on a Discrete VAC Base

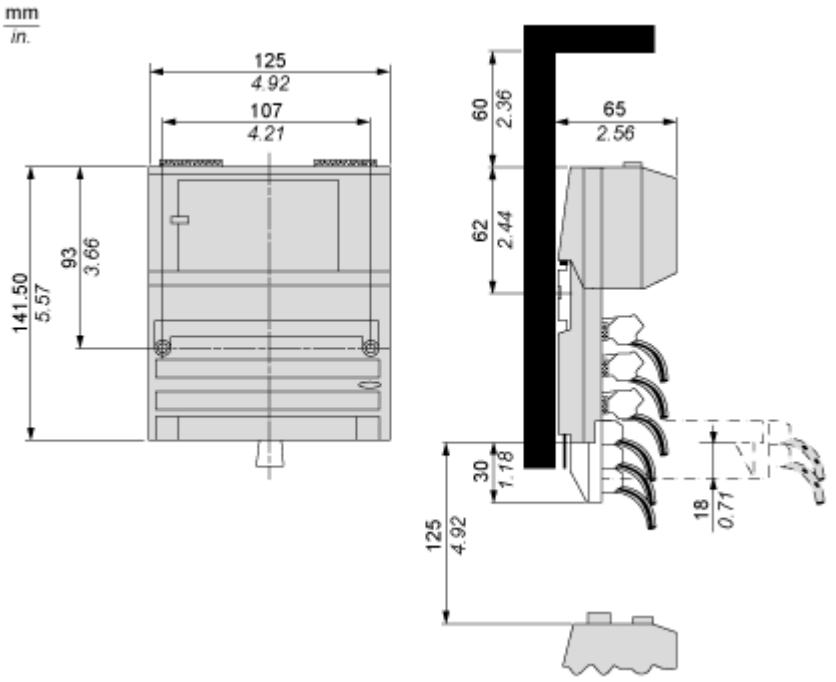

Mounting and Clearance

Mounting on a Wall

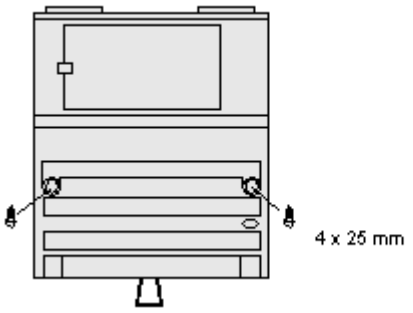

Connections and Schema

External Wiring Diagrams

2-Wire Devices

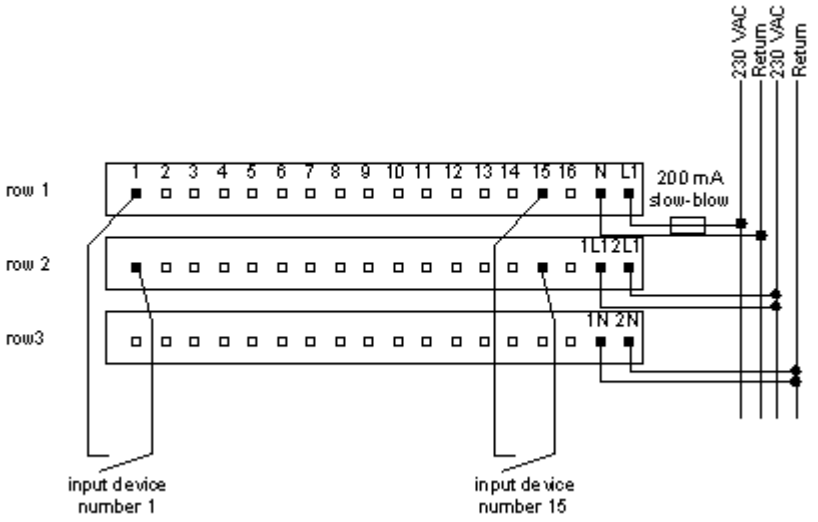

3-Wire Device

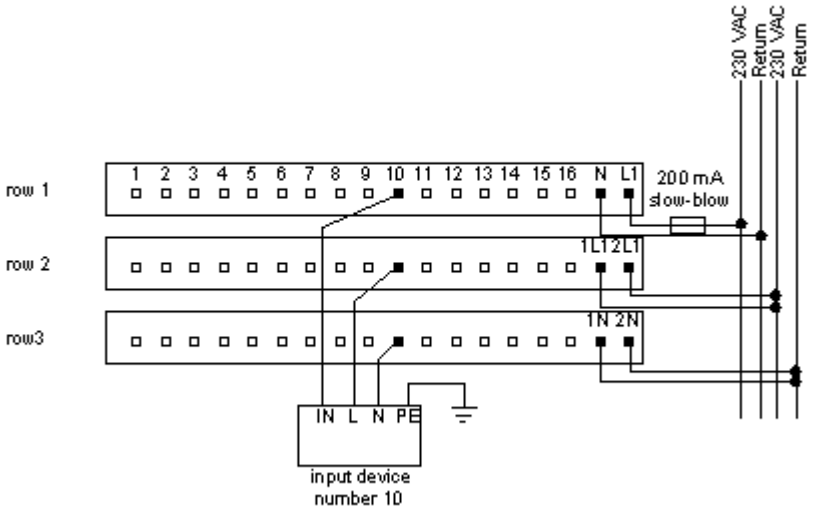
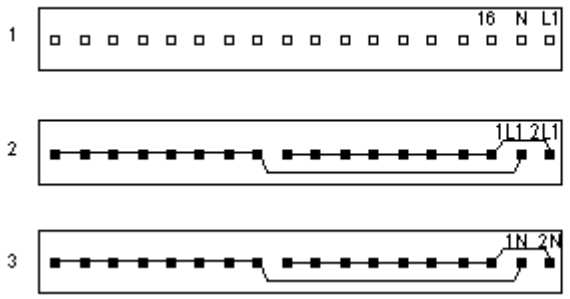
Internal Pin Connections