Product datasheet

Specifications

discrete output module Modicon Momentum - 32 O solid state

170ADO35000

Main

Range Of Product	Modicon Momentum automation platform
Product Or Component Type	Discrete output base DC
Group Of Channels	2 groups of 16 outputs
Discrete Output Number	32
Discrete Output Type	Solid state switch
Discrete Output Voltage	24 V DC
Current Per Channel	0.5 A
Short-Circuit Protection	Outputs electronically protected
Protective Treatment	TC

Complementary

[Ue] Rated Operational Voltage	24 V DC
Discrete Output Current	16 A per module 8 A per group
Maximum Leakage Current	1 mA 24 V DC
Surge Current	5 A during 1 ms
Maximum Voltage Drop	<0.5 V 0.5 A at state 1
Output Overload Protection	Outputs electronically protected
Response Time	0.1 ms from state 0 to state 1 0.1 ms from state 1 to state 0
Isolation Between Channels And Bus	500 V AC
Power Dissipation	6 W typical 7.5 W maximum
Marking	CE
Local Signalling	32 LEDs for channel status
Current Consumption	250 mA at 24 V DC

Disclaimer: This documentation is not intended as a substitute for and is not to be used for determining suitability or reliability of these products for specific user applications

Excluding VAT, FCA Jabal Ali & are subject to change – check with your local distributor.

Terminals Description Plc N°1	(15)OUT_DIS#15 TB (2)OUT_DIS#2 (8)OUT_DIS#8 (L+)PW_POS (16)OUT_DIS#16 (7)OUT_DIS#7 (M-)PW_NEG (12)OUT_DIS#12 (9)OUT_DIS#9 (11)OUT_DIS#11 (14)OUT_DIS#14 (1)OUT_DIS#1 (5)OUT_DIS#5 (10)OUT_DIS#10 (13)OUT_DIS#13 (3)OUT_DIS#3 (4)OUT_DIS#4 (6)OUT_DIS#6
Terminals Description Plc N°2	(6)OUT_DIS#22 (4)OUT_DIS#20 (7)OUT_DIS#23 (2L+)PW_POS (3)OUT_DIS#19 TB_1 (8)OUT_DIS#24 (10)OUT_DIS#26 (12)OUT_DIS#28 (2)OUT_DIS#18 (13)OUT_DIS#29 (16)IN_DIS#32 (11)OUT_DIS#27 (14)OUT_DIS#30 (15)OUT_DIS#31 (5)OUT_DIS#21 (9)OUT_DIS#25 (1)OUT_DIS#17 (1L+)PW_POS
Depth	47.5 mm
Height	141.5 mm
Width	125 mm
Net Weight	0.21 kg

Environment

Product Certifications	CSA UL
Resistance To Electrostatic Discharge	4 kV contact conforming to IEC 801-2 8 kV on air conforming to IEC 801-2
Resistance To Electromagnetic Fields	10 V/m 80...1000 MHz conforming to IEC 801-3
Ambient Air Temperature For Operation	0…60 °C
Ambient Air Temperature For Storage	-40…85 °C
Relative Humidity	95 % without condensation
Operating Altitude	<= 5000 m

Packing Units

Unit Type Of Package 1	PCE
Number Of Units In Package 1	1
Package 1 Height	5.5 cm
Package 1 Width	18.0 cm

Package 1 Length	26.0 cm
Package 1 Weight	403.0 g
Unit Type Of Package 2	S03
Number Of Units In Package 2	10
Package 2 Height	30 cm
Package 2 Width	30 cm
Package 2 Length	40 cm
Package 2 Weight	4.545 kg
Unit Type Of Package 3	P06
Number Of Units In Package 3	80
Package 3 Height	75.0 cm
Package 3 Width	40.0 cm
Package 3 Length	80.0 cm
Package 3 Weight	47 kg

Contractual warranty

Warranty	18 months

Sustainability

Green Premium™ label is Schneider Electric's commitment to delivering products with best-in-class environmental performance. Green Premium promises compliance with the latest regulations, transparency on environmental impacts, as well as circular and low-CO_2 products.

Guide to assessing product sustainability is a white paper that clarifies global eco-label standards and how to interpret environmental declarations.

Learn more about Green Premium >

Guide to assess a product's sustainability >

Transparency RoHS/REACh

Well-being performance

Mercury Free

Rohs Exemption Information	Yes

Certifications & Standards

Reach Regulation	REACh Declaration
Eu Rohs Directive	Pro-active compliance (Product out of EU RoHS legal scope)
China Rohs Regulation	China RoHS declaration
Environmental Disclosure	Product Environmental Profile
Weee	The product must be disposed on European Union markets following specific waste collection and never end up in rubbish bins
Circularity Profile	End of Life Information

Dimensions Drawings

Standard Adapter on a Typical Base

Dimensions

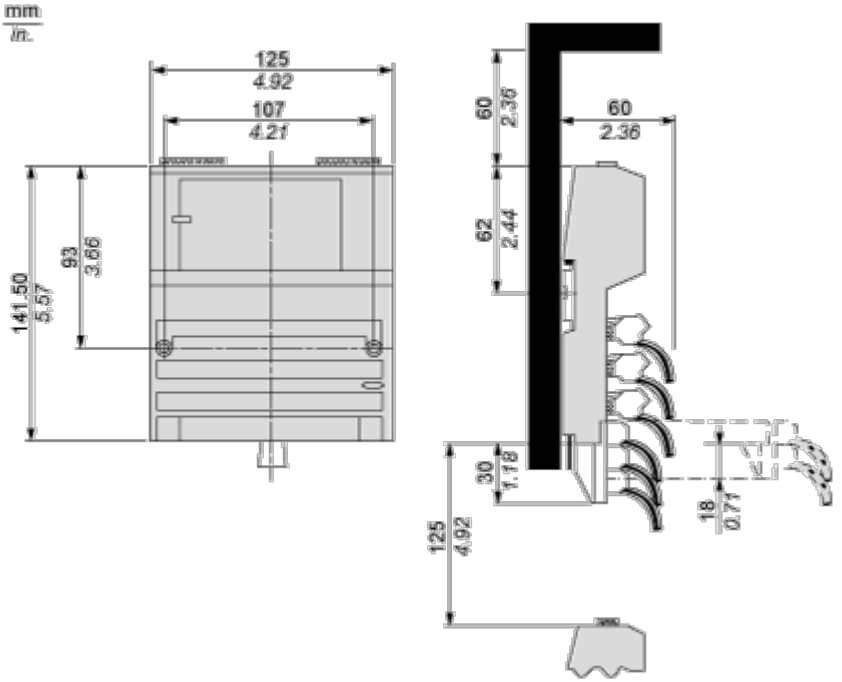

Mounting and Clearance

Mounting on a Wall

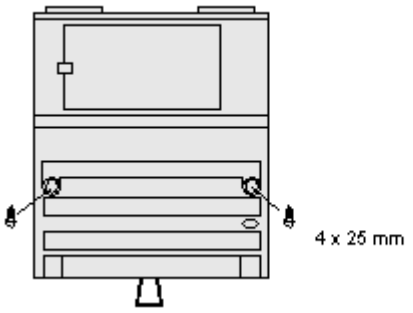

Connections and Schema

External Wiring Diagrams

2-Wire Actuator

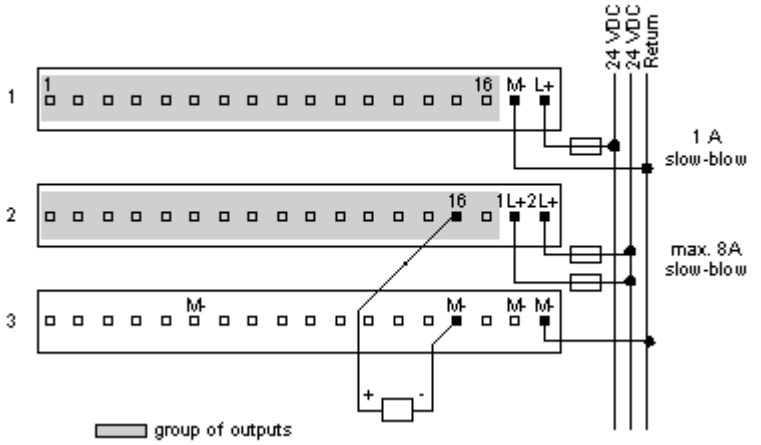

3-Wire Actuators

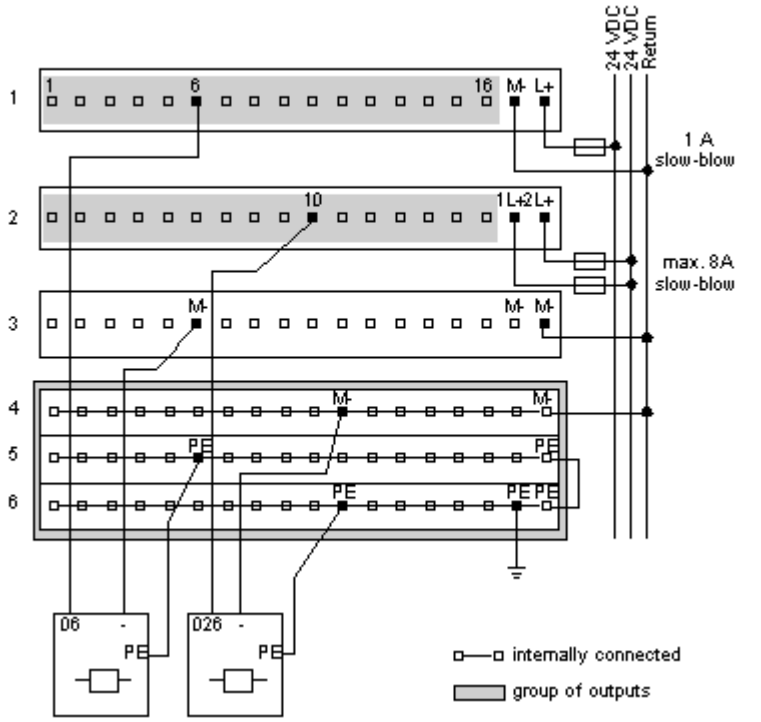

Internal Pin Connections
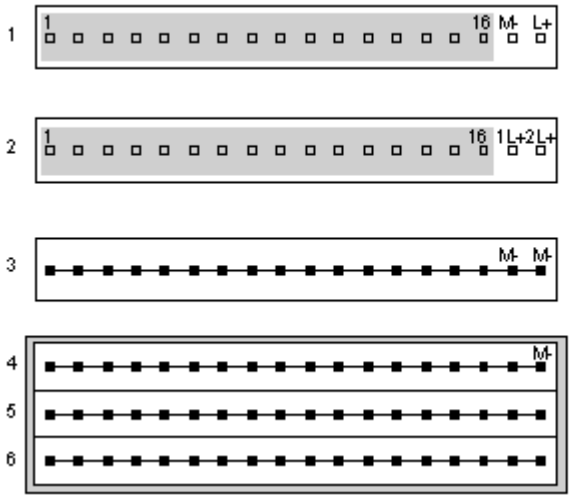
Rows 1 through 3 show the internal connections between terminals on the I/O base. Rows 4 through 6 show the internal connections on the optional busbar.