# Product datasheet

Specifications

Green Premium™

## regulated SMPS - 1 or 2-phase - 100..240 V AC - 24 V - 1.2 A

ABL8MEM24012

Discontinued on: 12 Nov 2020

Discontinued

## Main

| | |
|---|---|
| **Range Of Product** | Modicon Power Supply |
| **Product Or Component Type** | Power supply |
| **Power Supply Type** | Regulated switch mode |
| **Nominal Input Voltage** | 100...240 V AC phase to phase, terminal(s): L1-L2<br>100...240 V AC single phase, terminal(s): N-L1<br>120...250 V DC |
| **Rated Power In W** | 30 W |
| **Output Voltage** | 24 V DC |
| **Power Supply Output Current** | 1.2 A |

## Complementary

| | |
|---|---|
| **Input Voltage Limits** | 85...264 V AC |
| **Input Protection Type** | Integrated fuse (not interchangeable) |
| **Inrush Current** | 20 A |
| **Power Factor** | 0.5 at 24 V DC |
| **Efficiency** | 82 % |
| **Output Voltage Adjustment** | 22.2...28.8 V adjustable |
| **Power Dissipation In W** | 6.6 W |
| **Current Consumption** | 0.4 A 240 V AC<br>0.65 A 100 V AC |
| **Residual Ripple** | 250 mV |
| **Output Protection Type** | Against short-circuits |
| **Connections - Terminals** | Screw type terminals: 2 x 0.14...2 x 2.5 mm², (AWG 26...AWG 14) for input connection<br>Screw type terminals: 4 x 0.14...4 x 2.5 mm², (AWG 26...AWG 14) for output connection |
| **Status Led** | 1 LED (green) output voltage |
| **Depth** | 59 mm |
| **Height** | 100 mm |
| **Width** | 54 mm |
| **Net Weight** | 0.195 kg |
| **Output Coupling** | Parallel<br>Series |
| **Marking** | CE |

Excluding VAT, FCA Jabal Ali & are subject to change – check with your local distributor.

Disclaimer: This documentation is not intended as a substitute for and is not to be used for determining suitability or reliability of these products for specific user applications

| | |
|---|---|
| **Mounting Support** | 35 x 7.5 mm symmetrical DIN rail<br>panel 2 screws, diameter : 4 mm<br>35 x 15 mm symmetrical DIN rail |
| **Operating Position** | Vertical |
| **Supply** | SELV conforming to EN/IEC 60950-1<br>SELV conforming to EN/IEC 60204-1<br>SELV conforming to IEC 60364-4-41 |
| **Dielectric Strength** | 3000 V with between input and output |

## Environment

| | |
|---|---|
| **Standards** | UL 508<br>CSA C22.2 No 60950-1<br>EN/IEC 62368-1 |
| **Product Certifications** | TUV 60950-1<br>EAC<br>RCM<br>KC<br>CCSAus<br>CSA 22-2 No 950<br>CULus 508 |
| **Environmental Characteristic** | EMC conforming to EN 55022 class B<br>EMC conforming to EN 61000-6-3<br>EMC conforming to EN/IEC 61000-6-2<br>EMC conforming to EN/IEC 61204-3<br>Safety conforming to EN/IEC 60950-1 |
| **Operating Altitude** | 2000 m |
| **Ip Degree Of Protection** | IP20 conforming to EN/IEC 60529 |
| **Ambient Air Temperature For Operation** | -25…55 °C without derating mounting position A < 2000 m<br>55…70 °C with derating factor mounting position A < 2000 m |

## Packing Units

| | |
|---|---|
| **Unit Type Of Package 1** | PCE |
| **Number Of Units In Package 1** | 1 |

## Contractual warranty

| | |
|---|---|
| **Warranty** | 18 months |

## Sustainability

**Green Premium™ label** is Schneider Electric's commitment to delivering products with best-in-class environmental performance. Green Premium promises compliance with the latest regulations, transparency on environmental impacts, as well as circular and low-$CO_2$ products.

**Guide to assessing product sustainability** is a white paper that clarifies global eco-label standards and how to interpret environmental declarations.

Learn more about Green Premium >

Guide to assess a product's sustainability >

Transparency RoHS/REACh

## Well-being performance

| | |
|---|---|
| Mercury Free | |
| Rohs Exemption Information | Yes |
| Pvc Free | |

## Certifications & Standards

| | |
|---|---|
| **Reach Regulation** | REACh Declaration |
| **Eu Rohs Directive** | Pro-active compliance (Product out of EU RoHS legal scope) |
| **China Rohs Regulation** | China RoHS declaration |
| **Environmental Disclosure** | Product Environmental Profile |
| **Circularity Profile** | End of Life Information |

Dimensions Drawings

## Regulated Switch Mode Power Supplies

### Dimensions

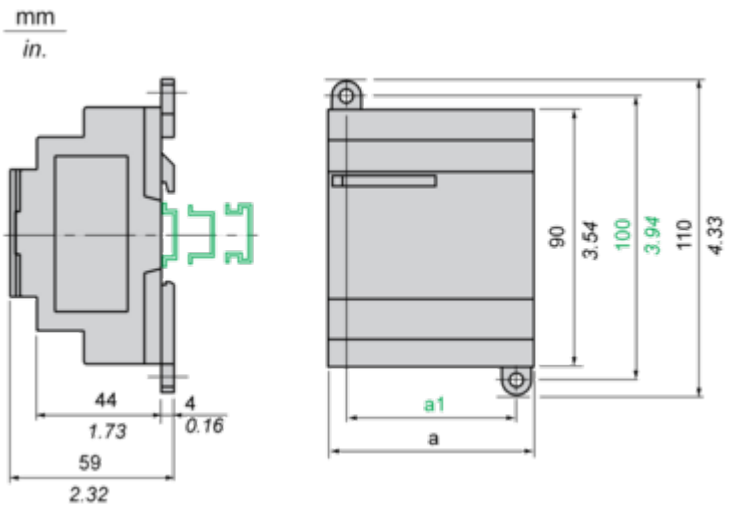


| | a in mm | a in in. | a1 in mm | a1 in in. |
|---|---|---|---|---|
| **ABL8MEM05040** | 54 | 2.12 | 42 | 1.65 |
| **ABL8MEM12020** | 54 | 2.12 | 42 | 1.65 |
| **ABL8MEM24003** | 36 | 1.41 | 24 | 0.94 |
| **ABL8MEM24006** | 36 | 1.41 | 24 | 0.94 |
| **ABL8MEM24012** | 54 | 2.12 | 42 | 1.65 |
| **ABL7RM24025** | 74 | 2.91 | 60 | 2.36 |

## Connections and Schema

### Regulated Switch Mode Power Supply

#### Internal Wiring Diagram

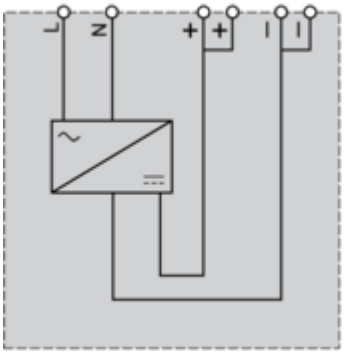

## Regulated Switch Mode Power Supplies

### Series or Parallel Connection

**Series Connection**

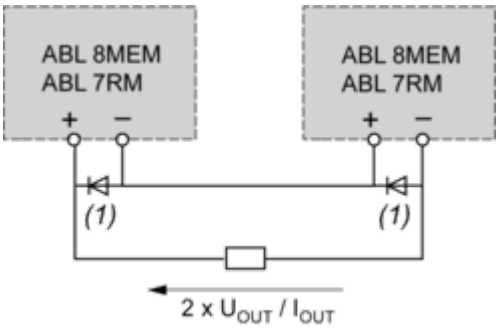


**(1)** Two Shottky diodes Imin = power supply In and Vmin = 50 V

**Parallel Connection**

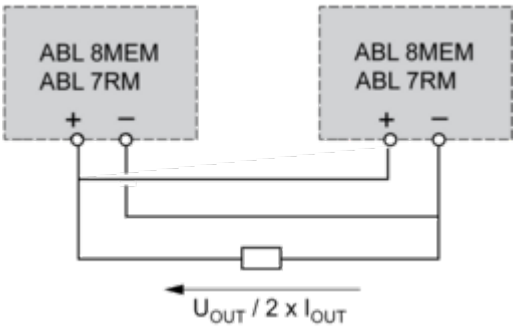


| Family | Series | Parallel |
|---|---|---|
| ABL 7RM/8MEM | 2 products max. | 2 products max. |

**NOTE:** Series or parallel connection is only recommended for products with identical references.

## Performance Curves

### Regulated Switch Mode Power Supplies

#### Derating

The ambient temperature is a determining factor that limits the power an electronic power supply can deliver continuously. If the temperature around the electronic components is too high, their life will be significantly reduced.
The nominal ambient temperature for the Modular range of Phaseo power supplies is 55°C. Above this temperature, derating is necessary up to a maximum temperature of 70°C (except for the ABL7RM24025 model).
The graph below shows the power as a percentage of the nominal power that the power supply can deliver continuously, depending on the ambient temperature.

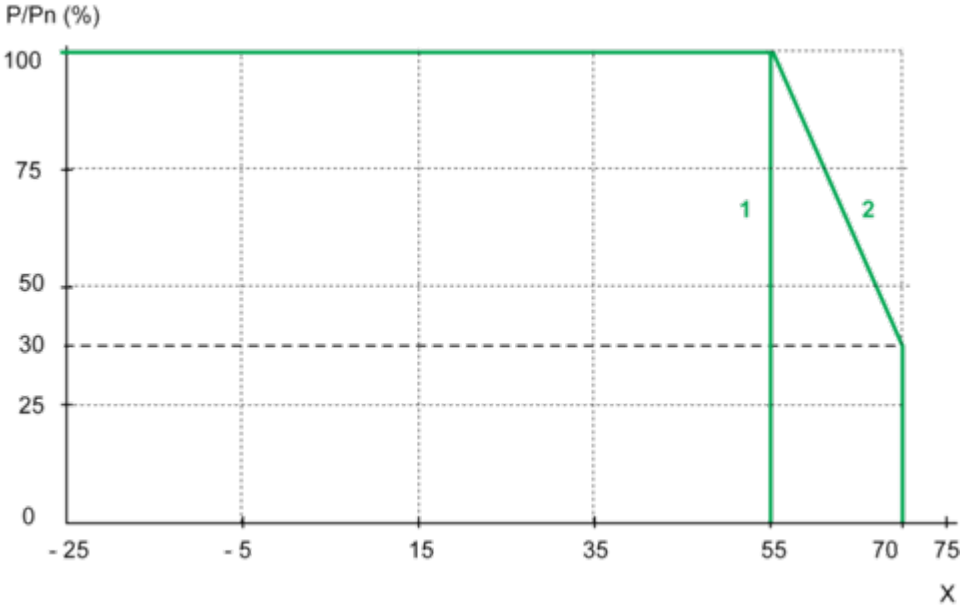


**X** Maximum operating temperature (°C)
**(1)** With an ABL7RM24025
**(2)** With an ABL8MEM•••••