Product datasheet

Specifications

Green Premium™

variable speed drive ATV61 - 200 hp - 460 V

ATV61HC13N4

Discontinued on: 1 Jan 2017

To be end-of-service on: 1 Jan 2025

Discontinued

Main

Range Of Product	Altivar 61
Product Or Component Type	Variable speed drive
Product Specific Application	Pumping and ventilation machine
Component Name	ATV61
Motor Power Kw	132 kW, 3 phases at 380...480 V
Motor Power Hp	200 hp, 3 phases at 380...480 V
Power Supply Voltage	380...480 V - 15...10 %
Supply Number Of Phases	3 phases
Line Current	224 A for 480 V 3 phases 132 kW / 200 hp 239 A for 380 V 3 phases 132 kW / 200 hp
Emc Filter	Class C2 EMC filter integrated
Assembly Style	With heat sink
Apparent Power	157.3 kVA at 380 V 3 phases 132 kW / 200 hp
Maximum Prospective Line Isc	35 kA for 3 phases
Maximum Transient Current	310.8 A for 60 s, 3 phases
Nominal Switching Frequency	2.5 kHz
Switching Frequency	2...8 kHz adjustable 2.5...8 kHz with derating factor
Asynchronous Motor Control	Flux vector control without sensor, standard Voltage/frequency ratio - Energy Saving, quadratic U/f Voltage/frequency ratio, 5 points Voltage/frequency ratio, 2 points
Synchronous Motor Control Profile	Vector control without sensor, standard
Communication Port Protocol	CANopen Modbus
Type Of Polarization	No impedance for Modbus

Disclaimer: This documentation is not intended as a substitute for and is not to be used for determining suitability or reliability of these products for specific user applications

Excluding VAT, FCA Jabal Ali & are subject to change – check with your local distributor.

Option Card	Communication card for APOGEE FLN Communication card for BACnet Communication card for CC-Link Controller inside programmable card Communication card for DeviceNet Communication card for EtherNet/IP Communication card for Fipio I/O extension card Communication card for Interbus-S Communication card for LonWorks Communication card for METASYS N2 Communication card for Modbus Plus Communication card for Modbus TCP Communication card for Modbus/Uni-Telway Multi-pump card Communication card for Profibus DP Communication card for Profibus DP V1

Complementary

Product Destination	Asynchronous motors Synchronous motors
Power Supply Voltage Limits	323…528 V
Power Supply Frequency	50...60 Hz - 5...5 %
Power Supply Frequency Limits	47.5...63 Hz
Continuous Output Current	259 A at 2.5 kHz, 380 V - 3 phases 259 A at 2.5 kHz, 460 V - 3 phases
Output Frequency	0.1…500 Hz
Speed Range	1…100 in open-loop mode, without speed feedback
Speed Accuracy	+/- 10 % of nominal slip 0.2 Tn to Tn without speed feedback
Torque Accuracy	+/- 15 % in open-loop mode, without speed feedback
Transient Overtorque	130 % of nominal motor torque +/- 10 % for 60 s
Braking Torque	<= 125 % with braking resistor 30 % without braking resistor
Regulation Loop	Frequency PI regulator
Motor Slip Compensation	Can be suppressed Automatic whatever the load Not available in voltage/frequency ratio (2 or 5 points) Adjustable
Diagnostic	1 LED (red) for drive voltage
Output Voltage	<= power supply voltage
Electrical Isolation	Between power and control terminals
Type Of Cable For Mounting In An Enclosure	With an IP21 or an IP31 kit: 3 wire(s)IEC cable at 40 °C, copper 70 °C / PVC With UL Type 1 kit: 3 wire(s)UL 508 cable at 40 °C, copper 75 °C / PVC Without mounting kit: 1 wire(s)IEC cable at 45 °C, copper 70 °C / PVC Without mounting kit: 1 wire(s)IEC cable at 45 °C, copper 90 °C / XLPE/EPR
Electrical Connection	Terminal 2.5 mm² / AWG 14 (AI1-/AI1+, AI2, AO1, R1A, R1B, R1C, R2A, R2B, LI1...LI6, PWR) Terminal 2 x 100 mm² / 2 x 250 kcmil (L1/R, L2/S, L3/T, U/T1, V/T2, W/T3) Terminal 60 mm² / 250 kcmil (PA, PB) Terminal 2 x 150 mm² / 2 x 250 kcmil (PC/-, PO, PA/+)
Tightening Torque	0.6 N.m (AI1-/AI1+, AI2, AO1, R1A, R1B, R1C, R2A, R2B, LI1...LI6, PWR) 24 N.m, 212 lb.in (L1/R, L2/S, L3/T, U/T1, V/T2, W/T3) 41 N.m, 360 lb.in (PC/-, PO, PA/+) 12 N.m, 106 lb.in (PA, PB)
Supply	Internal supply for reference potentiometer (1 to 10 kOhm): 10.5 V DC, +/- 5 %, <10 mA with overload and short-circuit protection Internal supply: 24 V DC (21…27 V), <200 mA with overload and short-circuit protection External supply: 24 V DC (19…30 V)

Analogue Input Number	2
Analogue Input Type	AI1-/AI1+ bipolar differential voltage: +/- 10 V DC 24 V max, resolution 11 bits + sign AI2 software-configurable current: 0...20 mA, impedance: 242 Ohm, resolution 11 bits AI2 software-configurable voltage: 0...10 V DC 24 V max, impedance: 30000 Ohm, resolution 11 bits
Sampling Time	2 ms +/- 0.5 ms (AI1-/AI1+) - analog input 2 ms +/- 0.5 ms (AI2) - analog input 2 ms +/- 0.5 ms (AO1) - analog output 2 ms +/- 0.5 ms (LI1...LI5) - discrete input 2 ms +/- 0.5 ms (LI6)if configured as logic input - discrete input
Absolute Accuracy Precision	+/- 0.6 % (AI1-/AI1+) for a temperature variation 60 °C +/- 0.6 % (AI2) for a temperature variation 60 °C +/- 1 % (AO1) for a temperature variation 60 °C
Linearity Error	+/- 0.15 % of maximum value (AI1-/AI1+) +/- 0.15 % of maximum value (AI2) +/- 0.2 % (AO1)
Analogue Output Number	1
Analogue Output Type	AO1 software-configurable current, analogue output range 0...20 mA, impedance: 500 Ohm, resolution 10 bits AO1 software-configurable voltage, analogue output range 0...10 V DC, impedance: 470 Ohm, resolution 10 bits AO1 software-configurable logic output 10 V, 20 mA
Discrete Output Number	2
Discrete Output Type	Configurable relay logic: (R1A, R1B, R1C) NO/NC - 100000 cycles Configurable relay logic: (R2A, R2B) NO - 100000 cycles
Maximum Response Time	<= 100 ms in STO (Safe Torque Off) R1A, R1B, R1C <= 7 ms, tolerance +/- 0.5 ms R2A, R2B <= 7 ms, tolerance +/- 0.5 ms
Minimum Switching Current	3 mA at 24 V DC for configurable relay logic
Maximum Switching Current	R1, R2: 2 A at 250 V AC inductive load, cos phi = 0.4 and L/R = 7 ms R1, R2: 2 A at 30 V DC inductive load, cos phi = 0.4 and L/R = 7 ms R1, R2: 5 A at 250 V AC resistive load, cos phi = 1 and L/R = 0 ms R1, R2: 5 A at 30 V DC resistive load, cos phi = 1 and L/R = 0 ms
Discrete Input Number	7
Discrete Input Type	Programmable (LI1...LI5)24 V DC (<= 30 V), with level 1 PLC - 3500 Ohm Switch-configurable (LI6)24 V DC (<= 30 V), with level 1 PLC - 3500 Ohm Switch-configurable PTC probe (LI6)0…6 probes - 1500 Ohm Safety input (PWR)24 V DC (<= 30 V) - 1500 Ohm
Discrete Input Logic	Negative logic (sink) (LI1...LI5), > 16 V (state 0), < 10 V (state 1) Positive logic (source) (LI1...LI5), < 5 V (state 0), > 11 V (state 1) Negative logic (sink) (LI6)if configured as logic input, > 16 V (state 0), < 10 V (state 1) Positive logic (source) (LI6)if configured as logic input, < 5 V (state 0), > 11 V (state 1)
Acceleration And Deceleration Ramps	S, U or customized Linear adjustable separately from 0.01 to 9000 s Automatic adaptation of ramp if braking capacity exceeded, by using resistor
Braking To Standstill	By DC injection
Protection Type	Against exceeding limit speed: drive Against input phase loss: drive Break on the control circuit: drive Input phase breaks: drive Line supply overvoltage: drive Line supply undervoltage: drive Overcurrent between output phases and earth: drive Overheating protection: drive Overvoltages on the DC bus: drive Power removal: drive Short-circuit between motor phases: drive Thermal protection: drive Motor phase break: motor Power removal: motor Thermal protection: motor

Insulation Resistance	> 1 mOhm 500 V DC for 1 minute to earth
Frequency Resolution	Analog input: 0.024/50 Hz Display unit: 0.1 Hz
Connector Type	1 RJ45 (on front face) for Modbus 1 RJ45 (on terminal) for Modbus Male SUB-D 9 on RJ45 for CANopen
Physical Interface	2-wire RS 485 for Modbus
Transmission Frame	RTU for Modbus
Transmission Rate	4800 bps, 9600 bps, 19200 bps, 38.4 Kbps for Modbus on terminal 9600 bps, 19200 bps for Modbus on front face 20 kbps, 50 kbps, 125 kbps, 250 kbps, 500 kbps, 1 Mbps for CANopen
Data Format	8 bits, 1 stop, even parity for Modbus on front face 8 bits, odd even or no configurable parity for Modbus on terminal
Number Of Addresses	1…127 for CANopen 1…247 for Modbus
Method Of Access	Slave CANopen
Marking	CE
Operating Position	Vertical +/- 10 degree
Net Weight	106 kg
Width	360 mm
Height	1022 mm
Depth	377 mm

Environment

Noise Level	69.5 dB conforming to 86/188/EEC
Dielectric Strength	3535 V DC between earth and power terminals 5092 V DC between control and power terminals
Electromagnetic Compatibility	Conducted radio-frequency immunity test level 3 conforming to IEC 61000-4-6 Electrical fast transient/burst immunity test level 4 conforming to IEC 61000-4-4 Electrostatic discharge immunity test level 3 conforming to IEC 61000-4-2 Radiated radio-frequency electromagnetic field immunity test level 3 conforming to IEC 61000-4-3 Voltage dips and interruptions immunity test conforming to IEC 61000-4-11
Standards	EN 61800-3 environments 1 category C3 EN/IEC 61800-5-1 EN/IEC 61800-3 UL Type 1 EN 61800-3 environments 2 category C3 EN 55011 class A group 2 IEC 60721-3-3 class 3C2
Product Certifications	DNV C-Tick UL CSA NOM 117 GOST
Pollution Degree	3 conforming to EN/IEC 61800-5-1 3 conforming to UL 840
Degree Of Proctection	IP41 on upper part conforming to EN/IEC 60529 IP41 on upper part conforming to EN/IEC 61800-5-1 IP54 on lower part conforming to EN/IEC 60529 IP54 on lower part conforming to EN/IEC 61800-5-1 IP00 conforming to EN/IEC 60529 IP00 conforming to EN/IEC 61800-5-1 IP30 on side parts conforming to EN/IEC 60529 IP30 on side parts conforming to EN/IEC 61800-5-1 IP30 on the front panel conforming to EN/IEC 60529 IP30 on the front panel conforming to EN/IEC 61800-5-1

Vibration Resistance	0.6 gn (f= 10…200 Hz) conforming to EN/IEC 60068-2-6 1.5 mm peak to peak (f= 3…10 Hz) conforming to EN/IEC 60068-2-6
Shock Resistance	7 gn for 11 ms conforming to EN/IEC 60068-2-27
Relative Humidity	5…95 % without condensation conforming to IEC 60068-2-3 5…95 % without dripping water conforming to IEC 60068-2-3
Ambient Air Temperature For Operation	-10…45 °C (without derating) 45…60 °C (with derating factor)
Ambient Air Temperature For Storage	-25…70 °C
Operating Altitude	<= 1000 m without derating 1000...3000 m with current derating 1 % per 100 m

Packing Units

Unit Type Of Package 1	PCE
Number Of Units In Package 1	1
Package 1 Height	53.0 cm
Package 1 Width	40.5 cm
Package 1 Length	122.0 cm
Package 1 Weight	100.0 kg
Unit Type Of Package 2	PAL
Number Of Units In Package 2	1
Package 2 Height	92.0 cm
Package 2 Width	85.0 cm
Package 2 Length	135.0 cm
Package 2 Weight	125.0 kg

Contractual warranty

Warranty	18 months

Sustainability

Green Premium™ label is Schneider Electric's commitment to delivering products with best-in-class environmental performance. Green Premium promises compliance with the latest regulations, transparency on environmental impacts, as well as circular and low-CO_2 products.

Guide to assessing product sustainability is a white paper that clarifies global eco-label standards and how to interpret environmental declarations.

Learn more about Green Premium >

Guide to assess a product's sustainability >

RoHS/REACh

Well-being performance

Mercury Free

Rohs Exemption Information	Yes

Certifications & Standards

Eu Rohs Directive	Pro-active compliance (Product out of EU RoHS legal scope) EU RoHS Declaration
China Rohs Regulation	China RoHS declaration
Weee	The product must be disposed on European Union markets following specific waste collection and never end up in rubbish bins

Dimensions Drawings

UL Type 1/IP 20 Drives

Dimensions with or without 1 Option Card (1)

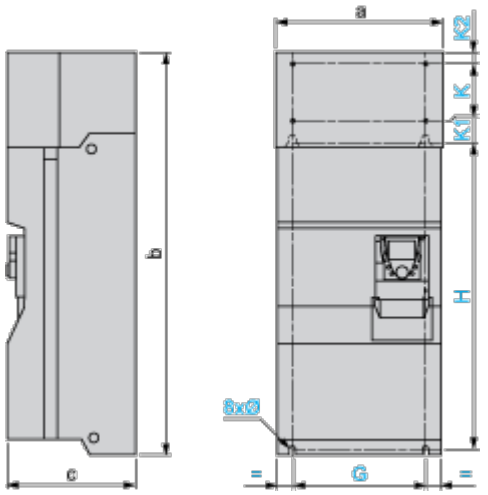

Dimensions in mm

a	b	c	G	H	K	K1	K2	Ø
360	1022	377	298	758	150	72	30	11.5

Dimensions in in.

a	b	c	G	H	K	K1	K2	Ø
14.17	40.24	14.84	11.73	29.84	5.90	2.83	1.18	0.45

(1) Option cards: I/O extension cards, communication cards or "Controller Inside" programmable card.

Dimensions with 2 Option Cards (1)

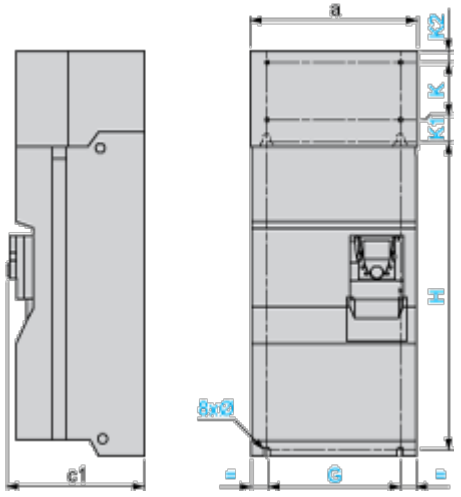

Dimensions in mm

a	c1	G	H	K	K1	K2	Ø
360	392	298	758	150	72	30	11.5

Dimensions in in.

a	c1	G	H	K	K1	K2	Ø
14.17	15.43	11.73	29.84	5.90	2.83	1.18	0.45

(1) Option cards: I/O extension cards, communication cards or "Controller Inside" programmable card.

Mounting and Clearance

Mounting Recommendations

Clearance

mm
in.

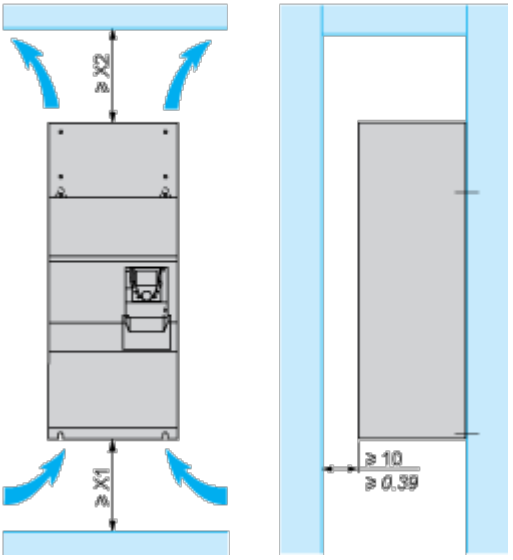

X1 in mm	X2 in mm	X1 in in.	X2 in in.
150	150	5.91	5.91

These drives can be mounted side by side, observing the following mounting recommendations:

mm
in.

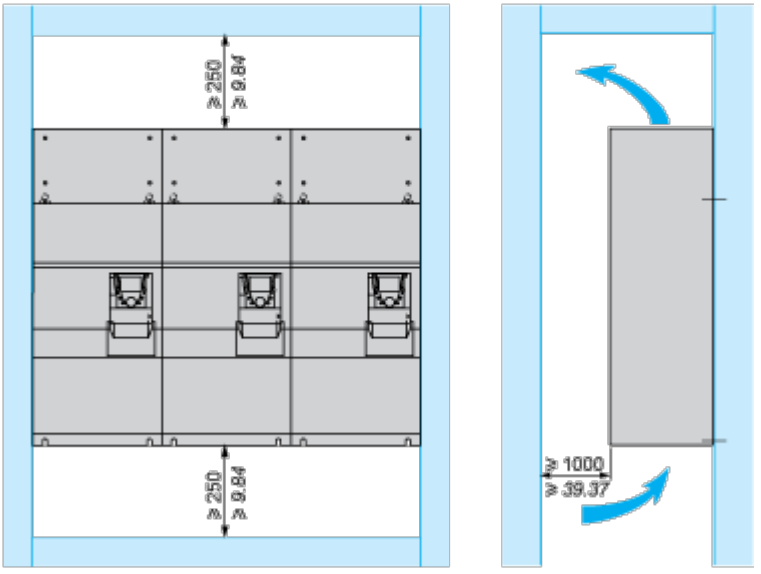

Specific Recommendations for Mounting the Drive in an Enclosure

Ventilation

To ensure proper air circulation in the drive:

- Fit ventilation grilles.
- Ensure that there is sufficient ventilation. If there is not, install a forced ventilation unit with a filter. The openings and/or fans must provide a flow rate at least equal to that of the drive fans (refer to the product characteristics).

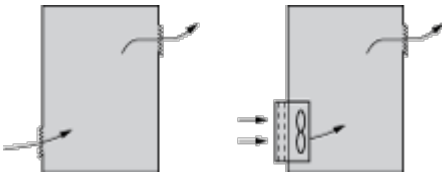

- Use special filters with IP 54 protection.
- Remove the blanking cover from the top of the drive.

Dust and Damp Proof Metal Enclosure (IP 54)

The drive must be mounted in a dust and damp proof enclosure in certain environmental conditions: dust, corrosive gases, high humidity with risk of condensation and dripping water, splashing liquid, etc.
This enables the drive to be used in an enclosure where the maximum internal temperature reaches 50°C.

Connections and Schema

Wiring Diagram Conforming to Standards EN 954-1 Category 1, IEC/EN 61508 Capacity SIL1, in Stopping Category 0 According to IEC/EN 60204-1

Three-Phase Power Supply with Upstream Breaking via Contactor

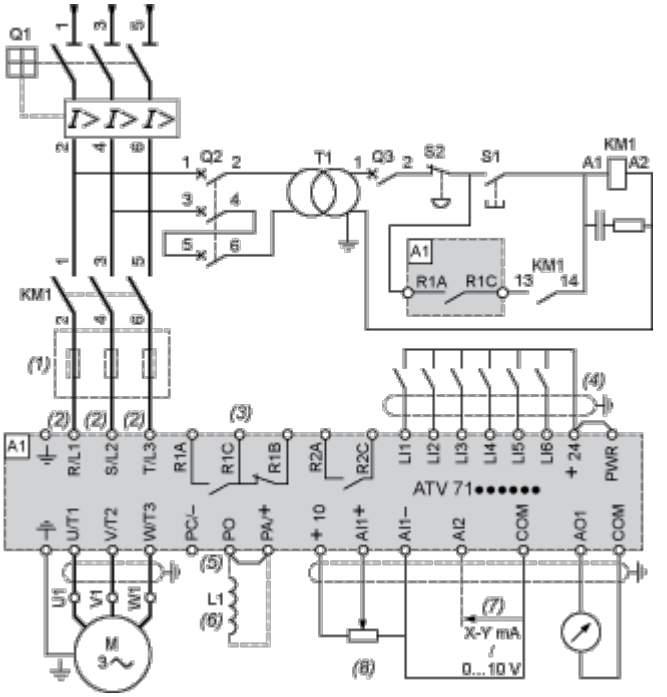

A1 ATV61 drive

KM1 Contactor

L1 DC choke

Q1 Circuit-breaker

Q2 GV2 L rated at twice the nominal primary current of T1

Q3 GB2CB05

S1, S2 XB4 B or XB5 A pushbuttons

T1 100 VA transformer 220 V secondary

(1) Line choke (three-phase); mandatory for ATV61HC11Y…HC80Y drives (except when a special transformer is used (12-pulse)).

(2) For ATV61HC50N4, ATV61HC63N4 and ATV61HC50Y…HC80Y drives, refer to the power terminal connections diagram.

(3) Fault relay contacts. Used for remote signalling of the drive status.

(4) Connection of the common for the logic inputs depends on the positioning of the SW1 switch. The above diagram shows the internal power supply switched to the “source” position (for other connection types, refer to the user guide).

(5) There is no PO terminal on ATV61HC11Y…HC80Y drives.

(6) Optional DC choke for ATV61H•••M3, ATV61HD11M3X…HD45M3X and ATV61H075N4…HD75N4 drives. Connected in place of the strap between the PO and PA/+ terminals. For ATV61HD55M3X…HD90M3X, ATV61HD90N4…HC63N4 drives, the choke is supplied with the drive; the customer is responsible for connecting it. For ATV61W•••N4 and ATV61W•••N4C drives, the DC choke is integrated.

(7) Software-configurable current (0…20 mA) or voltage (0…10 V) analog input.

(8) Reference potentiometer.

NOTE: All terminals are located at the bottom of the drive. Fit interference suppressors on all inductive circuits near the drive or connected on the same circuit, such as relays, contactors, solenoid valves, fluorescent lighting, etc.

Wiring Diagram Conforming to Standards EN 954-1 Category 1, IEC/EN 61508 Capacity SIL1, in Stopping Category 0 According to IEC/EN 60204-1

Three-Phase Power Supply with Downstream Breaking via Switch Disconnector

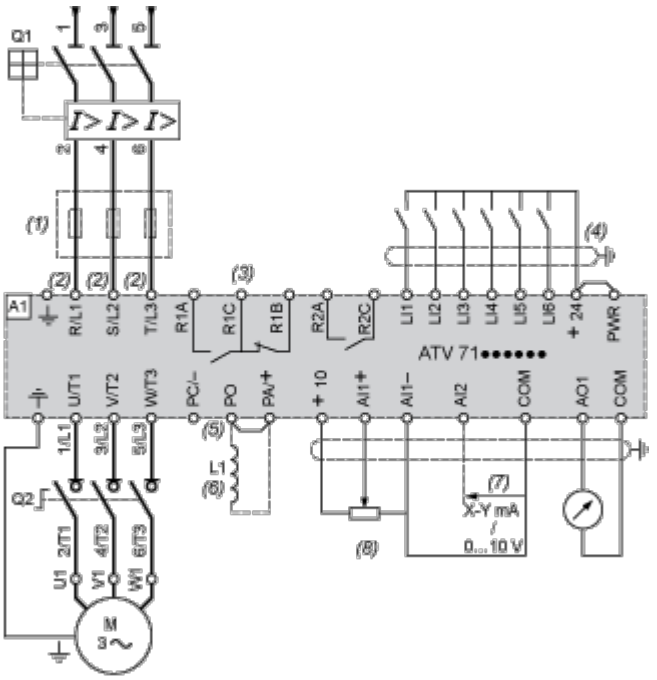

A1 ATV61 drive

L1 DC choke

Q1 Circuit-breaker

Q2 Switch disconnector (Vario)

(1) Line choke (three-phase), mandatory for ATV61HC11Y…HC80Y drives (except when a special transformer is used (12-pulse)).

(2) For ATV61HC50N4, ATV61HC63N4 and ATV61HC50Y…HC80Y drives, refer to the power terminal connections diagram.

(3) Fault relay contacts. Used for remote signalling of the drive status.

(4) Connection of the common for the logic inputs depends on the positioning of the SW1 switch. The above diagram shows the internal power supply switched to the “source” position (for other connection types, refer to the user guide).

(5) There is no PO terminal on ATV61HC11Y…HC80Y drives.

(6) Optional DC choke for ATV61H•••M3, ATV61HD11M3X…HD45M3X and ATV61H075N4…HD75N4 drives. Connected in place of the strap between the PO and PA/+ terminals. For ATV61HD55M3X…HD90M3X, ATV61HD90N4…HC63N4 drives, the choke is supplied with the drive; the customer is responsible for connecting it. For ATV61W•••N4 and ATV61W•••N4C drives, the DC choke is integrated.

(7) Software-configurable current (0…20 mA) or voltage (0…10 V) analog input.

(8) Reference potentiometer.

NOTE: All terminals are located at the bottom of the drive. Fit interference suppressors on all inductive circuits near the drive or connected on the same circuit, such as relays, contactors, solenoid valves, fluorescent lighting, etc.

Wiring Diagram Conforming to Standards EN 954-1 Category 3, IEC/EN 61508 Capacity SIL2, in Stopping Category 0 According to IEC/EN 60204-1

Three-Phase Power Supply, Low Inertia Machine, Vertical Movement

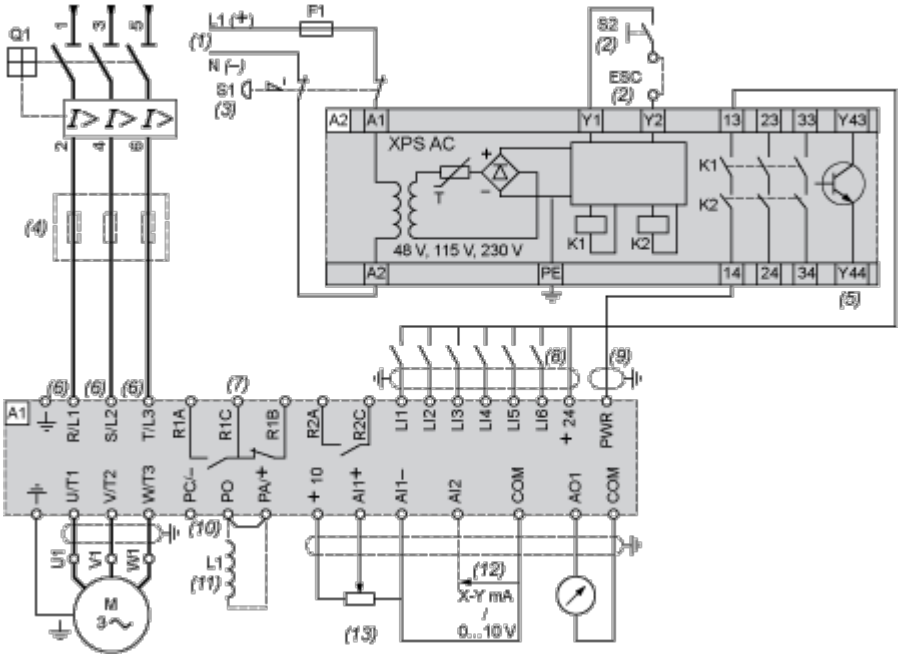

A1 ATV61 drive

A2 Preventa XPS AC safety module for monitoring emergency stops and switches. One safety module can manage the “Power Removal” function for several drives on the same machine. In this case, each drive must connect its PWR terminal to its + 24 V via the safety contacts on the XPS AC module. These contacts are independent for each drive.

F1 Fuse

L1 DC choke

Q1 Circuit-breaker

S1 Emergency stop button with 2 contacts

S2 XB4 B or XB5 A pushbutton

(1) Power supply: 24 Vdc or Vac, 115 Vac, 230 Vac.

(2) S2: resets XPS AC module on power-up or after an emergency stop. ESC can be used to set external starting conditions.

(3) Requests freewheel stopping of the movement and activates the “Power Removal” safety function.

(4) Line choke (three-phase), mandatory for and ATV61HC11Y…HC80Y drives (except when a special transformer is used (12-pulse)).

(5) The logic output can be used to signal that the machine is in a safe stop state.

(6) For ATV61HC50N4, ATV61HC63N4 and ATV61HC50Y…HC80Y drives, refer to the power terminal connections diagram.

(7) Fault relay contacts. Used for remote signalling of the drive status.

(8) Connection of the common for the logic inputs depends on the positioning of the SW1 switch. The above diagram shows the internal power supply switched to the “source” position (for other connection types, refer to the user guide).

(9) Standardized coaxial cable, type RG174/U according to MIL-C17 or KX3B according to NF C 93-550, external diameter 2.54 mm /0.09 in., maximum length 15 m / 49.21 ft. The cable shielding must be earthed.

(10) There is no PO terminal on ATV61HC11Y…HC80Y drives.

(11) Optional DC choke for ATV61H•••M3, ATV61HD11M3X…HD45M3X and ATV61H075N4…HD75N4 drives. Connected in place of the strap between the PO and PA/+ terminals. For ATV61HD55M3X…HD90M3X,

ATV61HD90N4…HC63N4 drives, the choke is supplied with the drive; the customer is responsible for connecting it. For ATV61W•••N4 and ATV61W•••N4C drives, the DC choke is integrated.

(12) Software-configurable current (0…20 mA) or voltage (0…10 V) analog input.

(13) Reference potentiometer.

NOTE: All terminals are located at the bottom of the drive. Fit interference suppressors on all inductive circuits near the drive or connected on the same circuit, such as relays, contactors, solenoid valves, fluorescent lighting, etc.

Wiring Diagram Conforming to Standards EN 954-1 Category 3, IEC/EN 61508 Capacity SIL2, in Stopping Category 1 According to IEC/EN 60204-1

Three-Phase Power Supply, High Inertia Machine

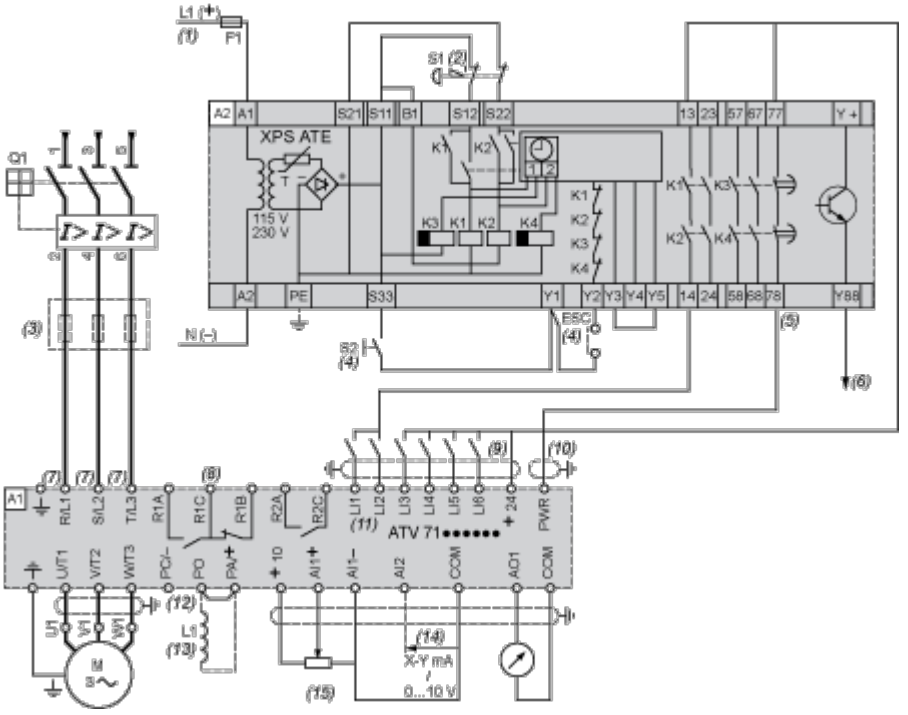

A1 ATV61 drive

A2 (5) Preventa XPS ATE safety module for monitoring emergency stops and switches. One safety module can manage the "Power Removal" safety function for several drives on the same machine. In this case the time delay must be adjusted on the drive controlling the motor that requires the longest stopping time. In addition, each drive must connect its PWR terminal to its + 24 V via the safety contacts on the XPS ATE module. These contacts are independent for each drive.

F1 Fuse

L1 DC choke

Q1 Circuit-breaker

S1 Emergency stop button with 2 contacts

S2 XB4 B or XB5 A pushbutton

(1) Power supply: 24 Vdc or Vac, 115 Vac, 230 Vac.

(2) Requests controlled stopping of the movement and activates the “Power Removal” safety function.

(3) Line choke (three-phase), mandatory for ATV61HC11Y…HC80Y drives (except when a special transformer is used (12-pulse)).

(4) S2: resets XPS ATE module on power-up or after an emergency stop. ESC can be used to set external starting conditions.

(5) The logic output can be used to signal that the machine is in a safe state.

(6) For stopping times requiring more than 30 seconds in category 1, use a Preventa XPS AV safety module which can provide a maximum time delay of 300 seconds.

(7) For ATV61HC50N4, ATV61HC63N4 and ATV61HC50Y…HC80Y drives, refer to the power terminal connections diagram.

(8) Fault relay contacts. Used for remote signalling of the drive status.

(9) Connection of the common for the logic inputs depends on the positioning of the SW1 switch. The above diagram shows the internal power supply switched to the “source” position (for other connection types, refer to the user guide).

(10) Standardized coaxial cable, type RG174/U according to MIL-C17 or KX3B according to NF C 93-550, external diameter 2.54 mm/0.09 in., maximum length 15 m/49.21 ft. The cable shielding must be earthed.

(11) Logic inputs LI1 and LI2 must be assigned to the direction of rotation: LI1 in the forward direction and LI2 in the reverse direction.

(12) There is no PO terminal on ATV61HC11Y…HC80Y drives.

(13) Optional DC choke for ATV61H•••M3, ATV61HD11M3X…HD45M3X and ATV61H075N4…HD75N4 drives. Connected in place of the strap between the PO and PA/+ terminals. For ATV61HD55M3X…HD90M3X, ATV61HD90N4…HC63N4 drives, the choke is supplied with the drive; the customer is responsible for connecting it. For ATV61W•••N4 and ATV61W•••N4C drives, the DC choke is integrated.

(14) Software-configurable current (0…20 mA) or voltage (0…10 V) analog input.

(15) Reference potentiometer.

NOTE: All terminals are located at the bottom of the drive. Fit interference suppressors on all inductive circuits near the drive or connected on the same circuit, such as relays, contactors, solenoid valves, fluorescent lighting, etc.

Performance Curves

Derating Curves

The derating curves for the drive nominal current (In) depend on the temperature and the switching frequency. For intermediate temperatures (e.g. 55°C), interpolate between 2 curves.

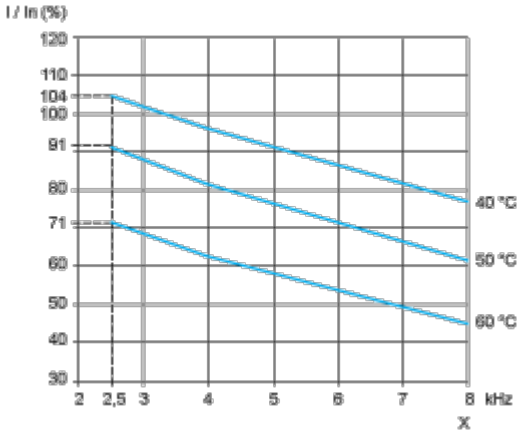

X Switching frequency