# Product datasheet

Specifications

## variable speed drive - ATV930 - 0,75kW - 200/240V- with braking unit - IP21

ATV930U07M3

## Main

| | |
|---|---|
| **Range Of Product** | Altivar Process ATV900 |
| **Device Application** | Industrial application |
| **Product Or Component Type** | Variable speed drive |
| **Product Destination** | Synchronous motors<br>Asynchronous motors |
| **Product Specific Application** | Process for industrial |
| **Variant** | Standard version<br>With braking chopper |
| **Network Number Of Phases** | 3 phases |
| **Mounting Mode** | Wall mount |
| **Communication Port Protocol** | EtherNet/IP<br>Modbus serial<br>Modbus TCP |
| **[Us] Rated Supply Voltage** | 200...240 V - 15...10 % |
| **Motor Power Kw** | 0.75 kW for normal duty<br>0.37 kW for heavy duty |
| **Continuous Output Current** | 4.6 A at 4 kHz for normal duty<br>3.3 A at 4 kHz for heavy duty |
| **Emc Filter** | Integrated<br>With EMC plate option |
| **Ip Degree Of Protection** | IP21 |
| **Degree Of Protection** | UL type 1 |
| **Option Module** | Slot A: communication module for Profibus DP V1<br>Slot A: communication module for PROFINET<br>Slot A: communication module for DeviceNet<br>Slot A: communication module for EtherCAT<br>Slot A: communication module for CANopen daisy chain RJ45<br>Slot A: communication module for CANopen SUB-D 9<br>Slot A: communication module for CANopen screw terminals<br>Slot A/slot B/slot C: digital and analog I/O extension module<br>Slot A/slot B/slot C: output relay extension module<br>Slot B: 5/12 V digital encoder interface module<br>Slot B: analog encoder interface module<br>Slot B: resolver encoder interface module<br>communication module for Ethernet Powerlink |
| **Discrete Input Logic** | 16 preset speeds |
| **Asynchronous Motor Control Profile** | Optimized torque mode<br>Constant torque standard<br>Variable torque standard |
| **Synchronous Motor Control Profile** | Permanent magnet motor<br>Synchronous reluctance motor |
| **Maximum Output Frequency** | 599 Hz |

Excluding VAT, FCA Jabal Ali & are subject to change – check with your local distributor.

Disclaimer: This documentation is not intended as a substitute for and is not to be used for determining suitability or reliability of these products for specific user applications

| | |
|---|---|
| **Switching Frequency** | 2...16 kHz adjustable<br>4...16 kHz with derating factor |
| **Nominal Switching Frequency** | 4 kHz |
| **Line Current** | 3.0 A at 200 V (normal duty)<br>1.7 A at 200 V (heavy duty)<br>2.6 A at 240 V (normal duty)<br>1.5 A at 240 V (heavy duty) |
| **Apparent Power** | 1.1 kVA at 240 V (normal duty)<br>0.6 kVA at 240 V (heavy duty) |
| **Maximum Transient Current** | 5.5 A during 60 s (normal duty)<br>5 A during 60 s (heavy duty) |
| **Network Frequency** | 50...60 Hz |
| **Prospective Line Isc** | 50 kA |

## Complementary

| | |
|---|---|
| **Discrete Input Number** | 10 |
| **Discrete Input Type** | DI1...DI8 programmable, 24 V DC (<= 30 V), impedance: 3.5 kOhm<br>DI7, DI8 programmable as pulse input: 0…30 kHz, 24 V DC (<= 30 V)<br>STOA, STOB safe torque off, 24 V DC (<= 30 V), impedance: > 2.2 kOhm |
| **Discrete Output Number** | 2 |
| **Discrete Output Type** | Logic output DQ+ 0…1 kHz <= 30 V DC 100 mA<br>Programmable as pulse output DQ+ 0…30 kHz <= 30 V DC 20 mA<br>Logic output DQ- 0…1 kHz <= 30 V DC 100 mA |
| **Analogue Input Number** | 3 |
| **Analogue Input Type** | AI1, AI2, AI3 software-configurable voltage: 0...10 V DC, impedance: 30 kOhm, resolution 12 bits<br>AI1, AI2, AI3 software-configurable current: 0...20 mA/4...20 mA, impedance: 250 Ohm, resolution 12 bits |
| **Analogue Output Number** | 2 |
| **Analogue Output Type** | Software-configurable voltage AQ1, AQ2: 0...10 V DC impedance 470 Ohm, resolution 10 bits<br>Software-configurable current AQ1, AQ2: 0...20 mA impedance 500 Ohm, resolution 10 bits |
| **Relay Output Number** | 3 |
| **Relay Output Type** | Configurable relay logic R1: fault relay NO/NC electrical durability 100000 cycles<br>Configurable relay logic R2: sequence relay NO electrical durability 1000000 cycles<br>Configurable relay logic R3: sequence relay NO electrical durability 1000000 cycles |
| **Maximum Switching Current** | Relay output R1 on resistive load, cos phi = 1: 3 A at 250 V AC<br>Relay output R1 on resistive load, cos phi = 1: 3 A at 30 V DC<br>Relay output R1 on inductive load, cos phi = 0.4 and L/R = 7 ms: 2 A at 250 V AC<br>Relay output R1 on inductive load, cos phi = 0.4 and L/R = 7 ms: 2 A at 30 V DC<br>Relay output R2, R3 on resistive load, cos phi = 1: 5 A at 250 V AC<br>Relay output R2, R3 on resistive load, cos phi = 1: 5 A at 30 V DC<br>Relay output R2, R3 on inductive load, cos phi = 0.4 and L/R = 7 ms: 2 A at 250 V AC<br>Relay output R2, R3 on inductive load, cos phi = 0.4 and L/R = 7 ms: 2 A at 30 V DC |
| **Minimum Switching Current** | Relay output R1, R2, R3: 5 mA at 24 V DC |
| **Physical Interface** | Ethernet<br>2-wire RS 485 |
| **Connector Type** | 2 RJ45<br>1 RJ45 |
| **Method Of Access** | Slave Modbus TCP |
| **Transmission Rate** | 10, 100 Mbits<br>4.8 kbps<br>9600 bit/s<br>19200 bit/s |

| | |
|---|---|
| **Transmission Frame** | RTU |
| **Number Of Addresses** | 1…247 |
| **Data Format** | 8 bits, configurable odd, even or no parity |
| **Type Of Polarization** | No impedance |
| **4 Quadrant Operation Possible** | True |
| **Acceleration And Deceleration Ramps** | Linear adjustable separately from 0.01...9999 s |
| **Motor Slip Compensation** | Automatic whatever the load<br>Can be suppressed<br>Not available in permanent magnet motor law<br>Adjustable |
| **Braking To Standstill** | By DC injection |
| **Brake Chopper Integrated** | True |
| **Maximum Input Current** | 3.0 A |
| **Maximum Output Voltage** | 240.0 V |
| **Relative Symmetric Network Frequency Tolerance** | 5 % |
| **Base Load Current At High Overload** | 3.3 A |
| **Base Load Current At Low Overload** | 4.6 A |
| **Power Dissipation In W** | Natural convection: 27 W at 200 V, switching frequency 4 kHz<br>Forced convection: 28 W at 200 V, switching frequency 4 kHz |
| **With Safety Function Safely Limited Speed (Sls)** | True |
| **With Safety Function Safe Brake Management (Sbc/Sbt)** | True |
| **With Safety Function Safe Operating Stop (Sos)** | False |
| **With Safety Function Safe Position (Sp)** | False |
| **With Safety Function Safe Programmable Logic** | False |
| **With Safety Function Safe Speed Monitor (Ssm)** | False |
| **With Safety Function Safe Stop 1 (Ss1)** | True |
| **With Sft Fct Safe Stop 2 (Ss2)** | False |
| **With Safety Function Safe Torque Off (Sto)** | True |
| **With Safety Function Safely Limited Position (Slp)** | False |
| **With Safety Function Safe Direction (Sdi)** | False |
| **Protection Type** | Thermal protection: motor<br>Safe torque off: motor<br>Motor phase break: motor<br>Thermal protection: drive<br>Safe torque off: drive<br>Overheating: drive<br>Overcurrent between output phases and earth: drive<br>Overload of output voltage: drive<br>Short-circuit protection: drive<br>Motor phase break: drive<br>Overvoltages on the DC bus: drive<br>Line supply overvoltage: drive<br>Line supply undervoltage: drive<br>Line supply phase loss: drive<br>Overspeed: drive<br>Break on the control circuit: drive |
| **Quantity Per Set** | 1 |
| **Width** | 144 mm |

| | |
|---|---|
| **Height** | 350 mm |
| **Depth** | 206 mm |
| **Net Weight** | 4.3 kg |
| **Electrical Connection** | Control: screw terminal 0.5...1.5 mm²/AWG 20...AWG 16<br>Line side: screw terminal 2.5...6 mm²/AWG 14...AWG 10<br>Motor: screw terminal 2.5...6 mm²/AWG 14...AWG 10<br>DC bus: screw terminal 2.5...6 mm²/AWG 14...AWG 10 |
| **Transmission Rate** | 10/100 Mbit/s for Ethernet IP/Modbus TCP<br>4.8, 9.6, 19.2, 38.4 kbit/s for Modbus serial |
| **Exchange Mode** | Half duplex, full duplex, autonegotiation Ethernet IP/Modbus TCP |
| **Data Format** | 8 bits, configurable odd, even or no parity for Modbus serial |
| **Type Of Polarization** | No impedance for Modbus serial |
| **Number Of Addresses** | 1…247 for Modbus serial |
| **Supply** | External supply for digital inputs: 24 V DC (19…30 V), <1.25 mA, protection type: overload and short-circuit protection<br>Internal supply for reference potentiometer (1 to 10 kOhm): 10.5 V DC +/- 5 %, <10 mA, protection type: overload and short-circuit protection<br>Internal supply for digital inputs and STO: 24 V DC (21…27 V), <200 mA, protection type: overload and short-circuit protection |
| **Local Signalling** | Local diagnostic: 3 LED (mono/dual colour)<br>Embedded communication status: 5 LED (dual colour)<br>Communication module status: 2 LED (dual colour)<br>Presence of voltage: 1 LED (red) |
| **Input Compatibility** | DI1...DI8: discrete input level 1 PLC conforming to IEC 61131-2<br>DI7, DI8: pulse input level 1 PLC conforming to IEC 65A-68<br>STOA, STOB: discrete input level 1 PLC conforming to IEC 61131-2 |
| **Discrete Input Logic** | Positive logic (source) (DI1...DI8), < 5 V (state 0), > 11 V (state 1)<br>Negative logic (sink) (DI1...DI8), > 16 V (state 0), < 10 V (state 1)<br>Positive logic (source) (DI7, DI8), < 0.6 V (state 0), > 2.5 V (state 1)<br>Positive logic (source) (STOA, STOB), < 5 V (state 0), > 11 V (state 1) |
| **Sampling Duration** | 2 ms +/- 0.5 ms (DI1...DI8) - discrete input<br>5 ms +/- 1 ms (DI7, DI8) - pulse input<br>1 ms +/- 1 ms (AI1, AI2, AI3) - analog input<br>5 ms +/- 1 ms (AQ1, AQ2) - analog output |
| **Accuracy** | +/- 0.6 % AI1, AI2, AI3 for a temperature variation 60 °C analog input<br>+/- 1 % AQ1, AQ2 for a temperature variation 60 °C analog output |
| **Linearity Error** | AI1, AI2, AI3: +/- 0.15 % of maximum value for analog input<br>AQ1, AQ2: +/- 0.2 % for analog output |
| **Refresh Time** | Relay output (R1, R2, R3): 5 ms (+/- 0.5 ms) |
| **Isolation** | Between power and control terminals |

# Environment

| | |
|---|---|
| **Operating Altitude** | <= 1000 m without derating<br>1000...4800 m with current derating 1 % per 100 m |
| **Operating Position** | Vertical +/- 10 degree |
| **Product Certifications** | UL<br>TÜV<br>CSA |
| **Marking** | CE |
| **Standards** | UL 508C<br>IEC 61800-3<br>IEC 61800-5-1<br>IEC 61000-3-12<br>IEC 60721-3<br>IEC 61508<br>IEC 13849-1 |

| | |
|---|---|
| **Maximum Thdi** | <48 % full load conforming to IEC 61000-3-12 |
| **Assembly Style** | Enclosed |
| **Electromagnetic Compatibility** | Electrostatic discharge immunity test level 3 conforming to IEC 61000-4-2<br>Radiated radio-frequency electromagnetic field immunity test level 3 conforming to IEC 61000-4-3<br>Electrical fast transient/burst immunity test level 4 conforming to IEC 61000-4-4<br>1.2/50 µs - 8/20 µs surge immunity test level 3 conforming to IEC 61000-4-5<br>Conducted radio-frequency immunity test level 3 conforming to IEC 61000-4-6 |
| **Environmental Class (During Operation)** | Class 3C3 according to IEC 60721-3-3<br>Class 3S3 according to IEC 60721-3-3 |
| **Maximum Acceleration Under Shock Impact (During Operation)** | 150 m/s² at 11 ms |
| **Maximum Acceleration Under Vibrational Stress (During Operation)** | 10 m/s² at 13...200 Hz |
| **Maximum Deflection Under Vibratory Load (During Operation)** | 1.5 mm at 2...13 Hz |
| **Permitted Relative Humidity (During Operation)** | Class 3K5 according to EN 60721-3 |
| **Volume Of Cooling Air** | 38 m3/h |
| **Overvoltage Category** | III |
| **Regulation Loop** | Adjustable PID regulator |
| **Insulation Resistance** | > 1 MOhm 500 V DC for 1 minute to earth |
| **Noise Level** | 54.5 dB conforming to 86/188/EEC |
| **Vibration Resistance** | 1.5 mm peak to peak (f= 2…13 Hz) conforming to IEC 60068-2-6<br>1 gn (f= 13…200 Hz) conforming to IEC 60068-2-6 |
| **Shock Resistance** | 15 gn for 11 ms conforming to IEC 60068-2-27 |
| **Environmental Characteristic** | Chemical pollution resistance class 3C3 conforming to IEC 60721-3-3<br>Dust pollution resistance class 3S3 conforming to IEC 60721-3-3 |
| **Relative Humidity** | 5…95 % without condensation conforming to IEC 60068-2-3 |
| **Ambient Air Temperature For Operation** | -15…50 °C (without derating)<br>50…60 °C (with derating factor) |
| **Noise Level** | 54.5 dB |
| **Pollution Degree** | 2 |
| **Ambient Air Transport Temperature** | -40…70 °C |
| **Ambient Air Temperature For Storage** | -40…70 °C |

## Packing Units

| | |
|---|---|
| **Unit Type Of Package 1** | PCE |
| **Number Of Units In Package 1** | 1 |
| **Package 1 Height** | 31.000 cm |
| **Package 1 Width** | 19.000 cm |
| **Package 1 Length** | 41.000 cm |
| **Package 1 Weight** | 5.785 kg |
| **Unit Type Of Package 2** | P06 |
| **Number Of Units In Package 2** | 6 |
| **Package 2 Height** | 75.000 cm |
| **Package 2 Width** | 60.000 cm |
| **Package 2 Length** | 80.000 cm |

| | |
|---|---|
| **Package 2 Weight** | 47.710 kg |

## Sustainability

**Green Premium™ label** is Schneider Electric's commitment to delivering products with best-in-class environmental performance. Green Premium promises compliance with the latest regulations, transparency on environmental impacts, as well as circular and low-$CO_2$ products.

**Guide to assessing product sustainability** is a white paper that clarifies global eco-label standards and how to interpret environmental declarations.

Learn more about Green Premium >

Guide to assess a product's sustainability >

Transparency RoHS/REACh

## Resource performance

Upgraded Components Available

## Well-being performance

Mercury Free

Rohs Exemption Information Yes

## Certifications & Standards

| | |
|---|---|
| **Reach Regulation** | REACh Declaration |
| **Eu Rohs Directive** | Pro-active compliance (Product out of EU RoHS legal scope) |
| **China Rohs Regulation** | China RoHS declaration |
| **Environmental Disclosure** | Product Environmental Profile |
| **Weee** | The product must be disposed on European Union markets following specific waste collection and never end up in rubbish bins |
| **Circularity Profile** | End of Life Information |

## Dimensions Drawings

### Dimensions

Right, Front and Rear View

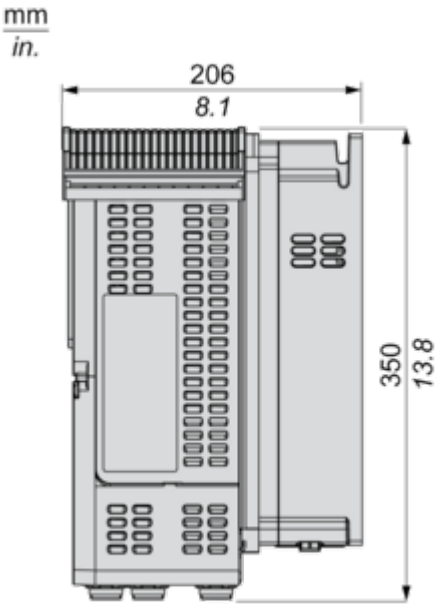


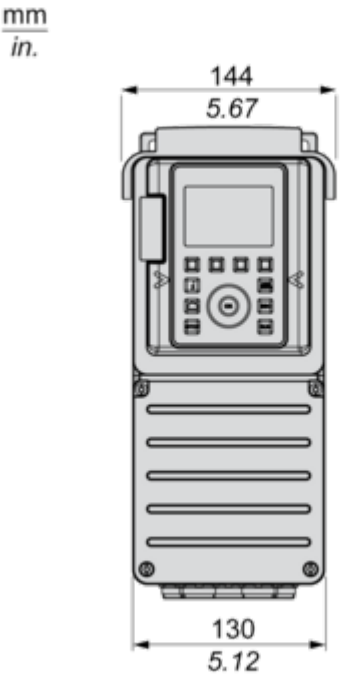


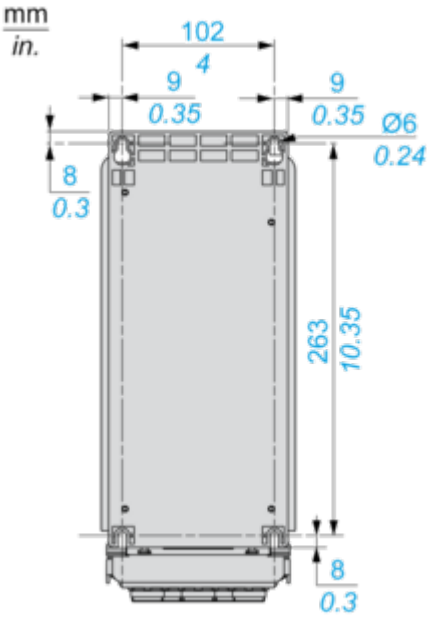

## Mounting and Clearance

### Clearances

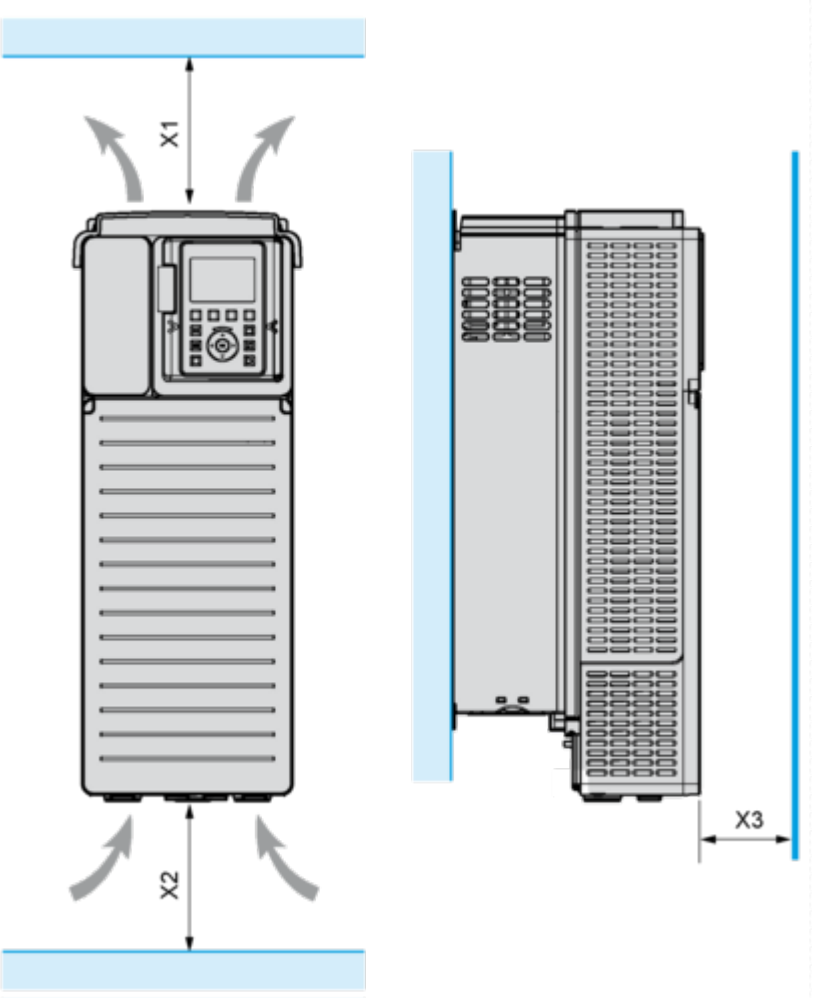


| X1 | X2 | X3 |
|---|---|---|
| ≥ 100 mm (3.94 in.) | ≥ 100 mm (3.94 in.) | ≥ 10 mm (0.39 in.) |

- Mount the device in a vertical position (±10°). This is required for cooling the device.
- Do not mount the device close to heat sources.
- Leave sufficient free space so that the air required for cooling purposes can circulate from the bottom to the top of the drive.

## Mounting Types

### Mounting Type A: Individual IP21

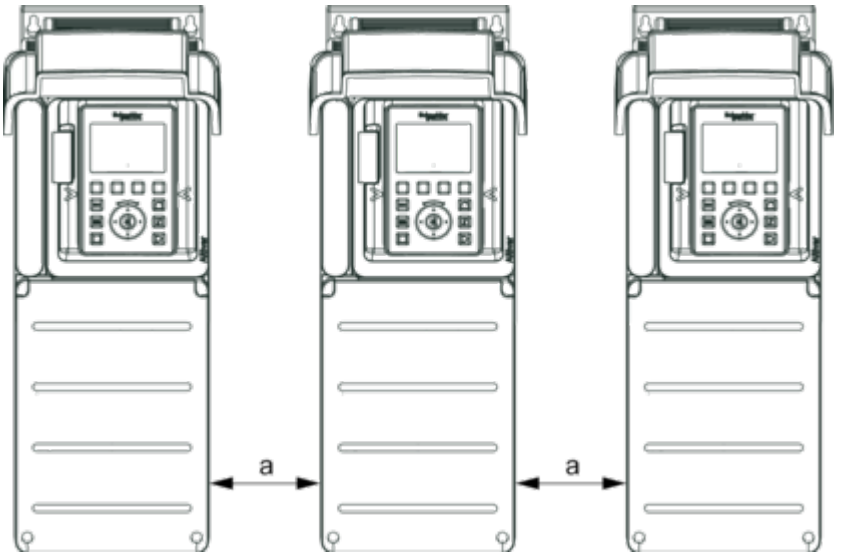


**a ≥** 100 mm (3.94 in.)

### Mounting Type B: Side by Side IP20

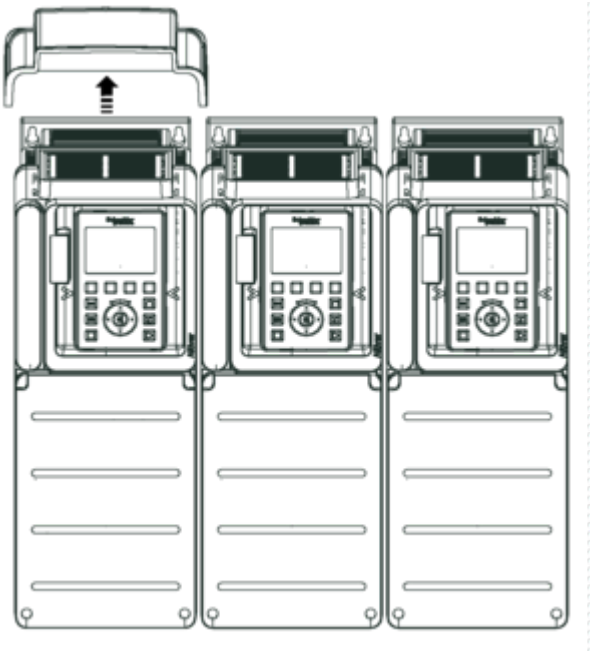

### Mounting Type C: Individual IP20

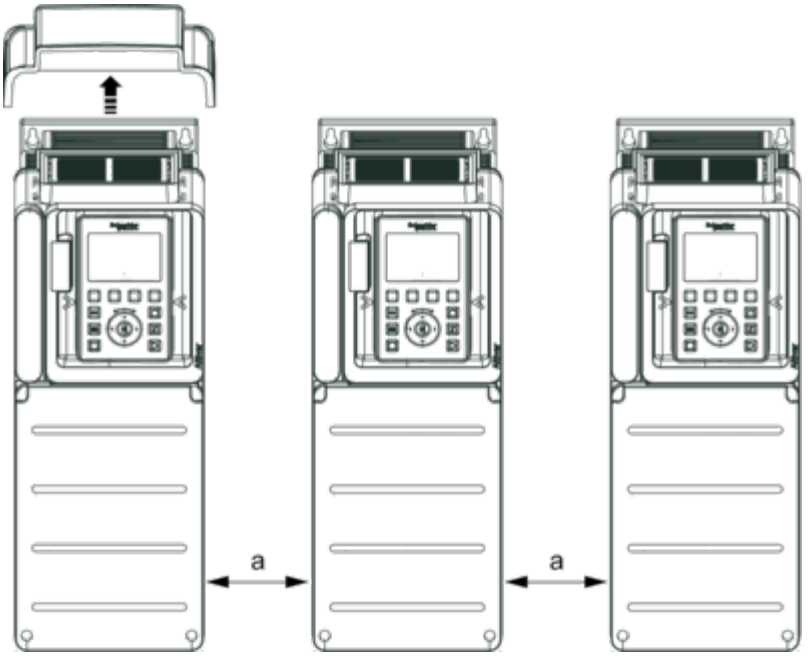


a ≥ 0

## Connections and Schema

### Three-Phase Power Supply with Upstream Breaking via Line Contactor

Connection diagrams conforming to standards EN 954-1 category 1 and IEC/EN 61508 capacity SIL1, stopping category 0 in accordance with standard IEC/EN 60204-1

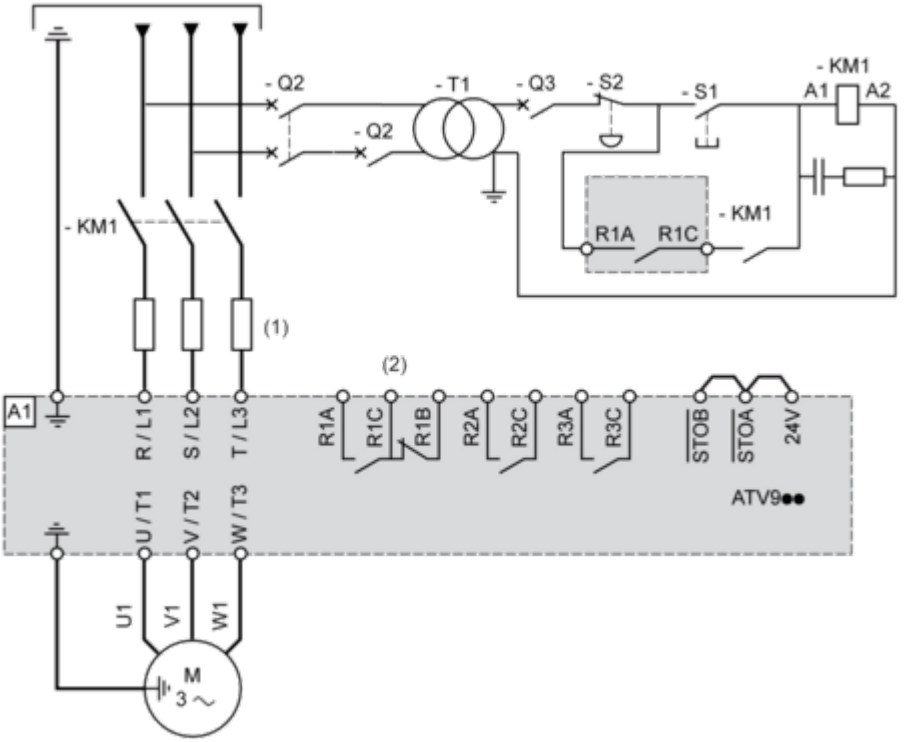


**(1)** Line choke if used
**(2)** Use relay R1 set to operating state Fault to switch Off the product once an error is detected.
**A1 :** Drive
**KM1 :** Line Contactor
**Q2, Q3 :** Circuit breakers
**S1, S2 :** Pushbuttons
**T1 :** Transformer for control part

## Three-Phase Power Supply with Downstream Breaking via Contactor

Connection diagrams conforming to standards EN 954-1 category 1 and IEC/EN 61508 capacity SIL1, stopping category 0 in accordance with standard IEC/EN 60204-1

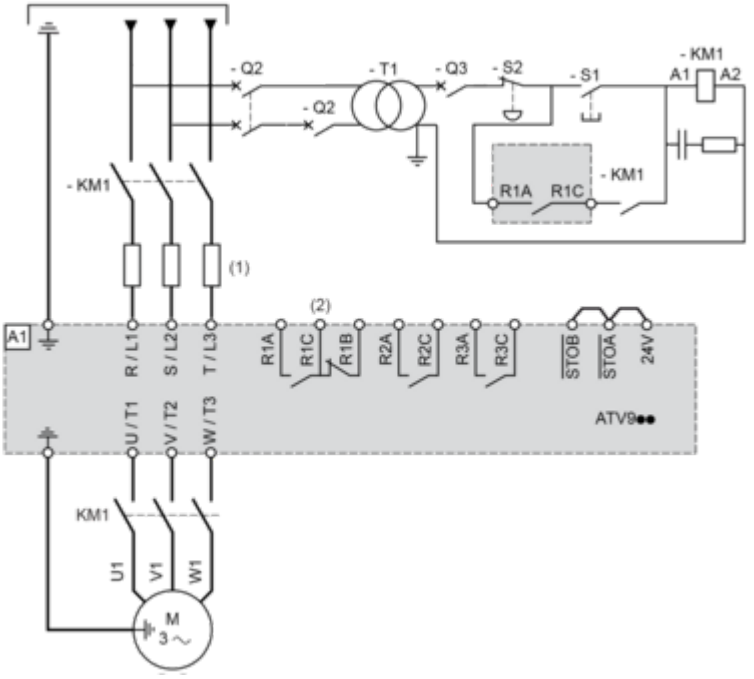


**(1)** Line choke if used
**(2)** Use relay R1 set to operating state Fault to switch Off the product once an error is detected.
**A1 :** Drive
**KM1 :** Contactor

## Control Block Wiring Diagram

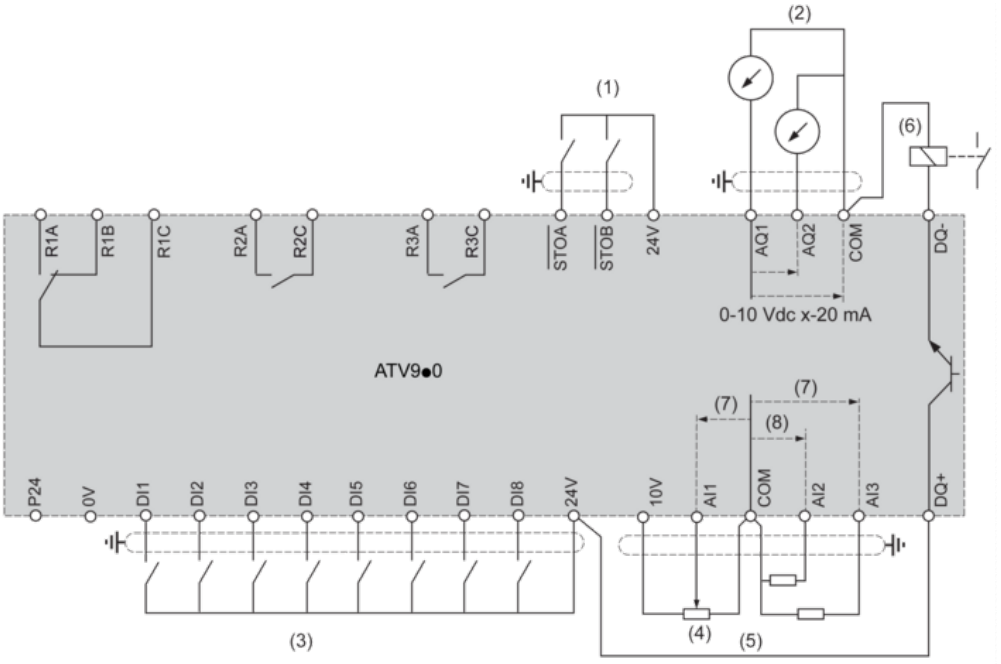


**(1)** Safe Torque Off
**(2)** Analog Output
**(3)** Digital Input
**(4)** Reference potentiometer
**(5)** Analog Input
**(6)** Digital Output
**(7)** 0-10 Vdc, x-20 mA
**(8)** 0-10 Vdc, -10 Vdc...+10 Vdc
**R1A, R1B, R1C :** Fault relay
**R2A, R2C :** Sequence relay
**R3A, R3C :** Sequence relay

### Sensor Connection

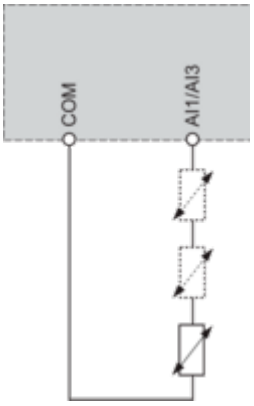


It is possible to connect either 1 or 3 sensors on terminals AI1 or AI3

## Sink / Source Switch Configuration

The switch is used to adapt the operation of the logic inputs to the technology of the programmable controller outputs.

- Set the switch to Source (factory setting) if using PLC outputs with PNP transistors.
- Set the switch to Ext if using PLC outputs with NPN transistors.

### Switch Set to SRC (Source) Position Using the Output Power Supply for the Digital Inputs

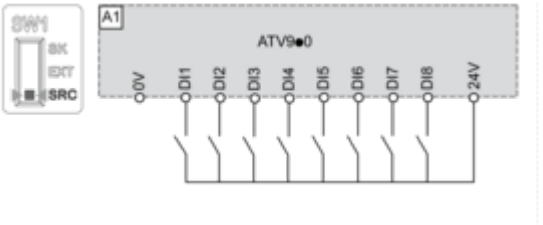


### Switch Set to SRC (Source) Position and Use of an External Power Supply for the DIs

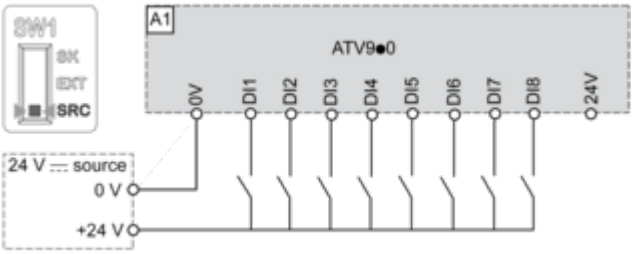


### Switch Set to SK (Sink) Position Using the Output Power Supply for the Digital Inputs

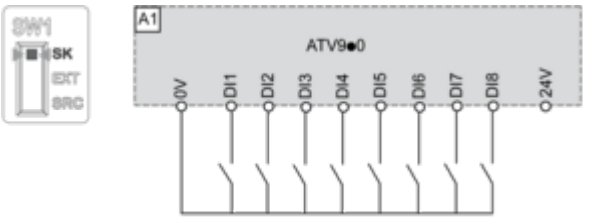


### Switch Set to EXT Position Using an External Power Supply for the DIs

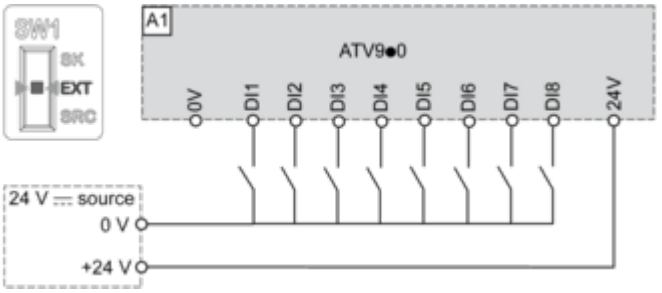

## Performance Curves

### Derating Curves

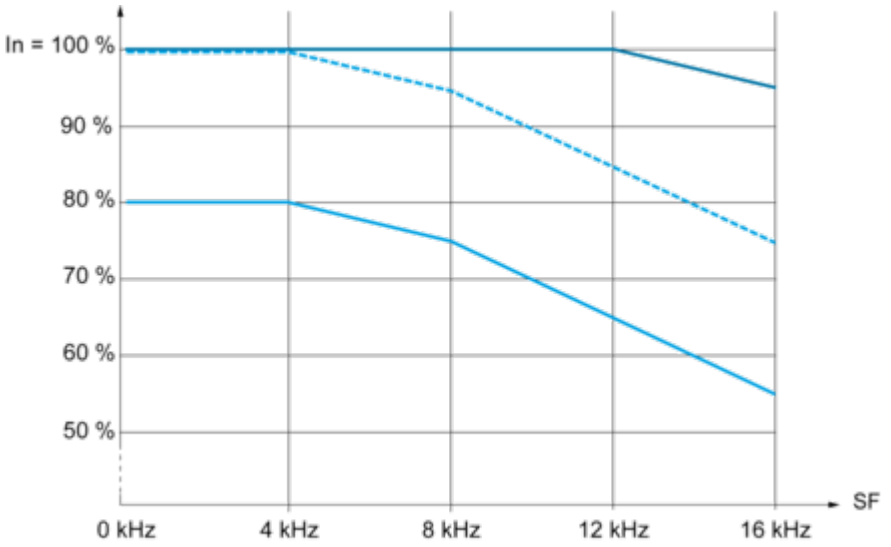


40 °C (104 °F) - Mounting type A, B and C
50 °C (122 °F) - Mounting type A, B and C
60 °C (140 °F) - Mounting type B and C

**In :** Nominal Drive Current
**SF :** Switching Frequency