Product datasheet

Specifications

Modicon Managed Switch - 4 ports for copper + 2 ports for fiber optic multimode

MCSESM063F2CU0

Main

Range Of Product	Modicon
Product Or Component Type	Ethernet TCP/IP managed switch
Concept	Transparent Ready
Communication Port Protocol	Ethernet TCP/IP SSH HTTP HTTPS SNMP RS232 SFTP SCP LLDP Telnet SNTP
Port Ethernet	100BASE-FX - 2 port(s) fiber optic 10/100BASE-TX - 4 port(s) copper cable
Maximum Number Of Switches In Cascade	Unlimited
Cybersecurity	Port hardening IP-based port security MAC-based port security Port-based access control Role-based access control RADIUS assignment HTTPS DoS prevention VLAN-based ACL Audit trail SNMP logging Pre-login banner

Complementary

Integrated Connection Type	Duplex SC fiber optic Shielded RJ45 copper cable
Transmission Support Medium	Multimode optical fiber for fiber optic Twisted shielded pairs cable CAT 5E for copper cable
Maximum Cable Distance Between Devices	100 m copper cable
Optic Fiber Length	4 km 62.5/125 µm 5 km 50/125 µm
Attenuation	0…11 dB (62.2/125 µm) 0…8 dB (50/125 µm)
Ethernet Service	Configuration via web server VLAN Multicast filtering Data stream control IGMP Snooping SNMP-Traps and SYSLOG

Excluding VAT, FCA Jabal Ali & are subject to change – check with your local distributor.

Disclaimer: This documentation is not intended as a substitute for and is not to be used for determining suitability or reliability of these products for specific user applications

Communication Service	TFTP Quality of Service (QoS) Port monitoring Port mirroring Address conflict detection
Diagnostics Run Time	Signal contact Self test MAC notification
Maximum Number Of Switches In A Ring	50
Redundancy	HiPER ring RSTP Link aggregation Link backup Redundant network coupling MRP
[Us] Rated Supply Voltage	12...24 V
Supply Voltage Limits	9.6…32 V DC SELV
Power Consumption In W	7 W
Electrical Connection	Removable connector 6 ways power supply
Mounting Support	35 mm symmetrical DIN rail
Marking	CE CULus RCM
Function Available	Security status Alarms (Traps) System information Report
Local Signalling	1 dual colour LED (green/yellow) for P1 P2 power supplies 1 dual colour LED (green/red) for device status 1 dual colour LED (green/yellow) for memory key status 1 dual colour LED (green/yellow) for channel diagnostic
Alarm Output	1 voltfree contact 1 A
Alarm Function	Power supply fault Data link status Switch fault Temperature threshold Redundancy ring fault Incorrect configuration External memory removed
Ethernet Cabling System	TF switches
Width	57 mm
Height	142.8 mm
Depth	117.6 mm
Net Weight	0.42 kg

Environment

Ambient Air Temperature For Operation	0…60 °C
Relative Humidity	1…95 % non-condensing
Ip Degree Of Protection	IP30
Directives	2014/35/EU - low voltage directive 2014/30/EU - electromagnetic compatibility
Standards	UL 61010-2-201 EN/IEC 61131-2 EN/IEC 62368-1

Product Certifications	CE UL RCM DNV ATEX

Packing Units

Unit Type Of Package 1	PCE
Number Of Units In Package 1	1
Package 1 Height	16.000 cm
Package 1 Width	6.000 cm
Package 1 Length	24.000 cm
Package 1 Weight	537.000 g
Unit Type Of Package 2	S04
Number Of Units In Package 2	20
Package 2 Height	30.000 cm
Package 2 Width	40.000 cm
Package 2 Length	60.000 cm
Package 2 Weight	11.756 kg

Contractual warranty

Warranty	18 months

Sustainability

Green Premium™ label is Schneider Electric's commitment to delivering products with best-in-class environmental performance. Green Premium promises compliance with the latest regulations, transparency on environmental impacts, as well as circular and low-CO_2 products.

Guide to assessing product sustainability is a white paper that clarifies global eco-label standards and how to interpret environmental declarations.

Learn more about Green Premium >

Guide to assess a product's sustainability >

Transparency RoHS/REACh

Well-being performance

Mercury Free

Rohs Exemption Information	Yes

Certifications & Standards

Reach Regulation	REACh Declaration
Eu Rohs Directive	Pro-active compliance (Product out of EU RoHS legal scope)
China Rohs Regulation	China RoHS declaration
Environmental Disclosure	Product Environmental Profile
Weee	The product must be disposed on European Union markets following specific waste collection and never end up in rubbish bins
Circularity Profile	End of Life Information

Dimensions Drawings
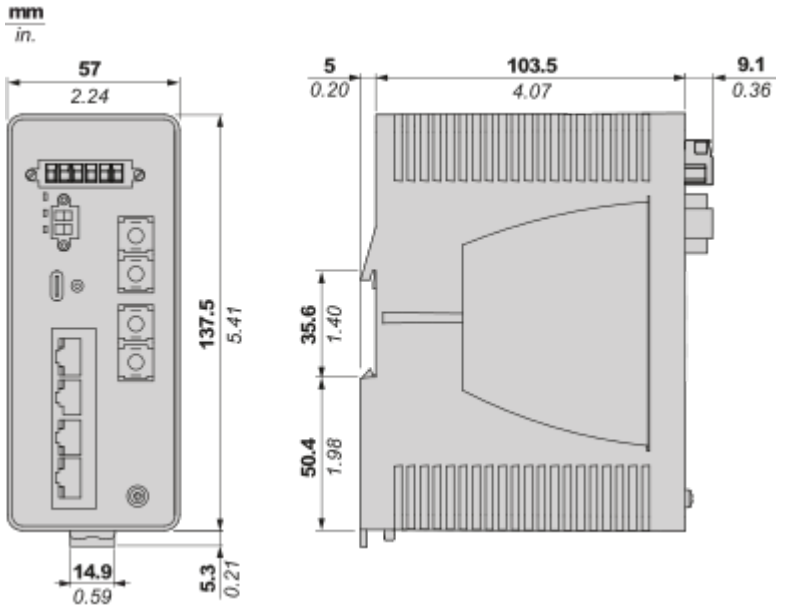
Dimensions