Product datasheet

Specifications

Green Premium™

analog output module Modicon Quantum - 4 O - 4..20 mA

140ACO02000C

Discontinued on: 31 Dec 2022

To be end-of-service on: 31 Dec 2030

Discontinued - Service only

Main

Range Of Product	Modicon Quantum automation platform
Product Or Component Type	Analogue output module

Complementary

Analogue Output Number	4
Addressing Requirement	4 output words
Loop Voltage	12…30 V DC
Maximum Voltage Drop	<30 V 20 mA
Analogue Output Range	4...20 mA 0...4096 counts, 12 bits bipolar current
Absolute Accuracy Error	+/- 0.20 % of full scale at 25 °C
Linearity	+/- 1 LSB
Accuracy Drift According To Temperature	+/- 0.004 % of full scale/°C +/- 0.007 % of full scale/°C maximum
Isolation Between Channels	500 V 47...63 Hz AC 750 V for 1 minute DC
Update Time	3 ms
Setting Time	900 µs to +/- 0.1 % of the final value
Fault Type	Open circuit 4...20 mA
Bus Current Requirement	480 mA
Maximum Power Dissipation In W	5.3 W
External Power Requirement	12...30 V
Marking	CE
Local Signalling	1 LED (green) for bus communication is present (Active) 1 LED (red) for external fault 4 LEDs (green) for channel is turned on 4 LEDs (red) for channel fault
Module Format	Standard
Net Weight	0.3 kg

Environment

Protective Treatment	Conformal coating Humiseal 1A33
Product Certifications	cUL FM Class 1 Division 2

Disclaimer: This documentation is not intended as a substitute for and is not to be used for determining suitability or reliability of these products for specific user applications

Standards	CSA C22.2 No 142 UL 508
Resistance To Electromagnetic Fields	10 V/m 80…2000 MHz conforming to IEC 801-3
Ambient Air Temperature For Operation	0…60 °C
Ambient Air Temperature For Storage	-40…85 °C
Relative Humidity	95 % without condensation
Operating Altitude	<= 5000 m

Packing Units

Unit Type Of Package 1	PCE
Number Of Units In Package 1	1
Package 1 Height	4.5 cm
Package 1 Width	16.5 cm
Package 1 Length	31.0 cm
Package 1 Weight	463.0 g
Unit Type Of Package 2	S03
Number Of Units In Package 2	7
Package 2 Height	30.0 cm
Package 2 Width	30.0 cm
Package 2 Length	40.0 cm
Package 2 Weight	3.241 kg

Contractual warranty

Warranty	18 months

Sustainability

Green Premium™ label is Schneider Electric's commitment to delivering products with best-in-class environmental performance. Green Premium promises compliance with the latest regulations, transparency on environmental impacts, as well as circular and low-CO_2 products.

Guide to assessing product sustainability is a white paper that clarifies global eco-label standards and how to interpret environmental declarations.

Learn more about Green Premium >

Guide to assess a product's sustainability >

RoHS/REACh

Well-being performance

Reach Free Of Svhc	
Mercury Free	
Rohs Exemption Information	Yes

Certifications & Standards

Eu Rohs Directive	Pro-active compliance (Product out of EU RoHS legal scope) EU RoHS Declaration
China Rohs Regulation	China RoHS declaration
Weee	The product must be disposed on European Union markets following specific waste collection and never end up in rubbish bins
Circularity Profile	End of Life Information

Dimensions Drawings

Racks for Modules Mounting

Dimensions of Modules and Racks

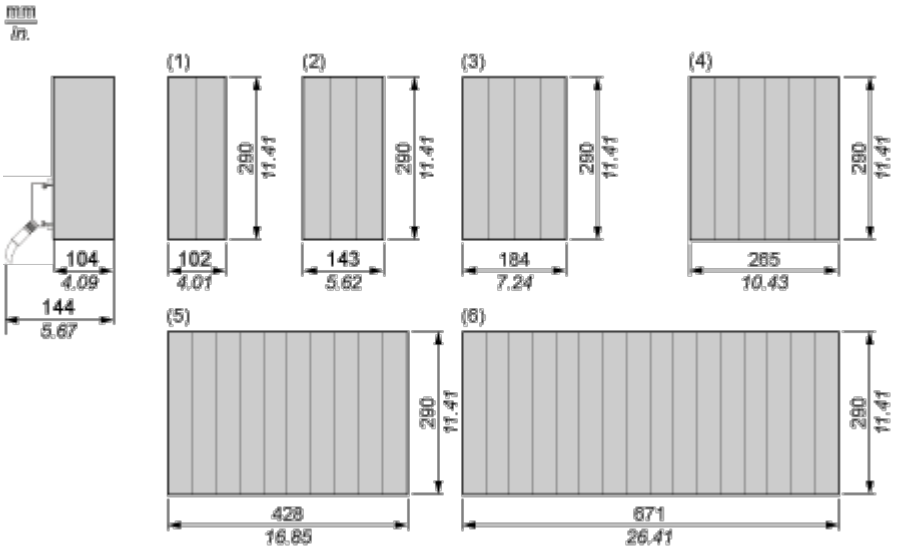

(1) 2 slots

(2) 3 slots

(3) 4 slots

(4) 6 slots

(5) 10 slots

(6) 16 slots

Connections and Schema

Analog Output 4-Channel Current Module

Wiring Diagram

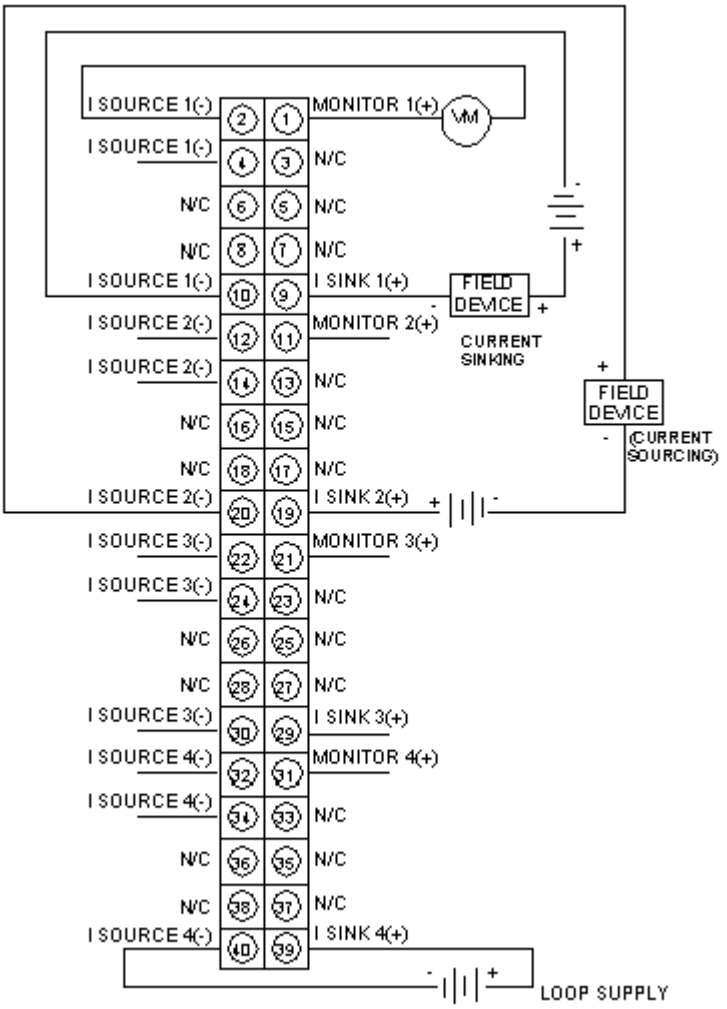

N/C Not Connected