Product datasheet

Specifications

Green Premium™

analog input output module Modicon Quantum - 4 I - 2 O

140AMM09000

Discontinued on: 31 Dec 2022

To be end-of-service on: 31 Dec 2030

Discontinued - Service only

Main

Range Of Product	Modicon Quantum automation platform
Product Or Component Type	Input/output analog module
Type Of Filter	Single pole low pass - 3 dB at 21 Hz +/- 20 % input circuit

Complementary

I/O Modularity	6 channels
Addressing Requirement	2 output words 5 input words
Analogue Input Number	4
Analogue Input Type	Bipolar current +/- 20 mA - resolution: 15 bits DC Bipolar voltage +/- 10 V - resolution: 16 bits DC Bipolar voltage +/- 5 V - resolution: 15 bits DC Unipolar current 0...20 mA - resolution: 15 bits DC Unipolar offset current 4...20 mA - resolution: 14 bits DC Unipolar offset voltage 1...5 V - resolution: 14 bits DC Unipolar voltage 0...10 V - resolution: 16 bits DC Unipolar voltage 0...5 V - resolution: 15 bits DC
Absolute Maximum Input	+/- 25 mA current +/- 50 V voltage
Input Impedance	> 10 MOhm voltage > 250 Ohm current
Offset	+/- 0.0014 % of full scale maximum/°C 0...60 °C input circuit
Gain Shift	+/- 0.002 of full scale maximum 0...60 °C input circuit
Common Mode Rejection	> 80 dB 50/60 Hz input circuit
Analogue Output Number	2
Analogue Output Range	4...20 mA
Analogue Output Resolution	12 bits
Loop Voltage	0…60 V DC with external resistance output circuit 7…30 V DC output circuit
Maximum Voltage Drop	<30 V DC at 20 mA
Setting Time	900 µs to +/- 0.1 % of the final value output circuit
External Power Requirement	7...30 V output circuit
Absolute Accuracy Error	+/- 0.004 % of full scale at 0…60 °C output circuit +/- 0.007 %/°C of full scale maximum at 0…60 °C output circuit +/- 0.03 % at 25 °C input circuit +/- 0.05 % of full scale maximum at 25 °C input circuit +/- 0.20 % of full scale at 25 °C output circuit

Disclaimer: This documentation is not intended as a substitute for and is not to be used for determining suitability or reliability of these products for specific user applications

Linearity	2.4 % over and under range voltage 2.4 % over range, and - 9.6 % under range current Monotonic +/- 1 LSB input Monotonic +/- 1 LSB output
Update Time	15 ms output circuit 320 ms input circuit
Fault Type	Open circuit input/output circuit Overtacking scale (unipolar) input circuit Status byte output circuit
Isolation Between Channels	500 V AC for 1 minute 750 V DC for 1 minute
Isolation Between Channels And Bus	500 V AC for 1 minute 750 V DC for 1 minute
Isolation Between Input Channel And Output Channel	500 V for 1 minute 750 V for 1 minute
Marking	CE
Local Signalling	1 LED (green) for bus communication is present (Active) 1 LED (red) for external fault 6 LEDs (green) for channel is turned on 6 LEDs (red) for channel fault
Bus Current Requirement	350 mA
Module Format	Standard
Net Weight	0.3 kg

Environment

Product Certifications	FM Class 1 Division 2 C-Tick.1
Standards	UL 508 CSA C22.2 No 142
Resistance To Electromagnetic Fields	10 V/m 80…2000 MHz conforming to IEC 801-3
Ambient Air Temperature For Operation	0…60 °C
Ambient Air Temperature For Storage	-40…85 °C
Relative Humidity	95 % without condensation
Operating Altitude	<= 5000 m

Packing Units

Unit Type Of Package 1	PCE
Number Of Units In Package 1	1
Package 1 Height	5.0 cm
Package 1 Width	16.4 cm
Package 1 Length	31.0 cm
Package 1 Weight	461.0 g
Unit Type Of Package 2	S03
Number Of Units In Package 2	7
Package 2 Height	30.0 cm
Package 2 Width	30.0 cm
Package 2 Length	40.0 cm
Package 2 Weight	3.62 kg

Contractual warranty

Warranty	18 months

Sustainability

Green Premium™ label is Schneider Electric's commitment to delivering products with best-in-class environmental performance. Green Premium promises compliance with the latest regulations, transparency on environmental impacts, as well as circular and low-CO_2 products.

Guide to assessing product sustainability is a white paper that clarifies global eco-label standards and how to interpret environmental declarations.

Learn more about Green Premium >

Guide to assess a product's sustainability >

RoHS/REACh

Well-being performance

Reach Free Of Svhc	
Mercury Free	
Rohs Exemption Information	Yes

Certifications & Standards

Eu Rohs Directive	Pro-active compliance (Product out of EU RoHS legal scope) EU RoHS Declaration
China Rohs Regulation	China RoHS declaration
Weee	The product must be disposed on European Union markets following specific waste collection and never end up in rubbish bins
Circularity Profile	End of Life Information

Dimensions Drawings

Racks for Modules Mounting

Dimensions of Modules and Racks

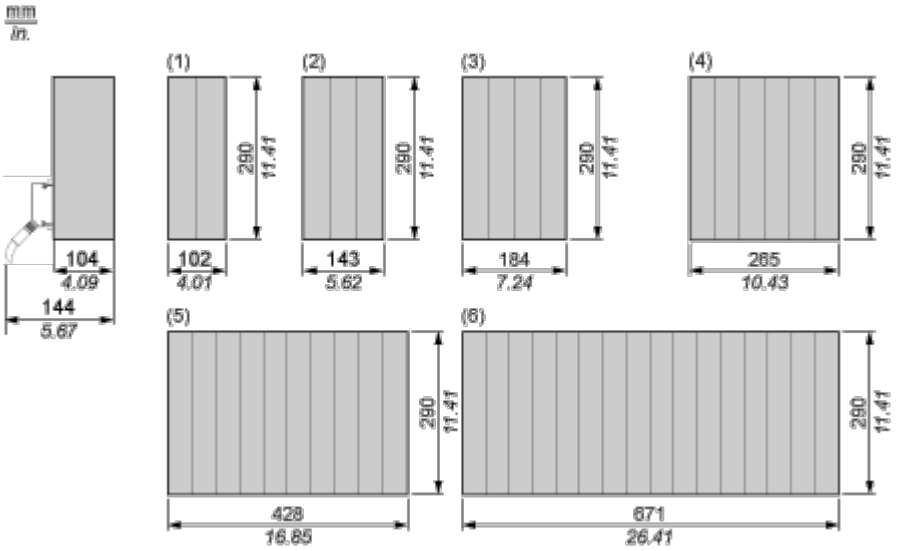

(1) 2 slots

(2) 3 slots

(3) 4 slots

(4) 6 slots

(5) 10 slots

(6) 16 slots

Connections and Schema

Analog Input/Output Module

Wiring Diagram

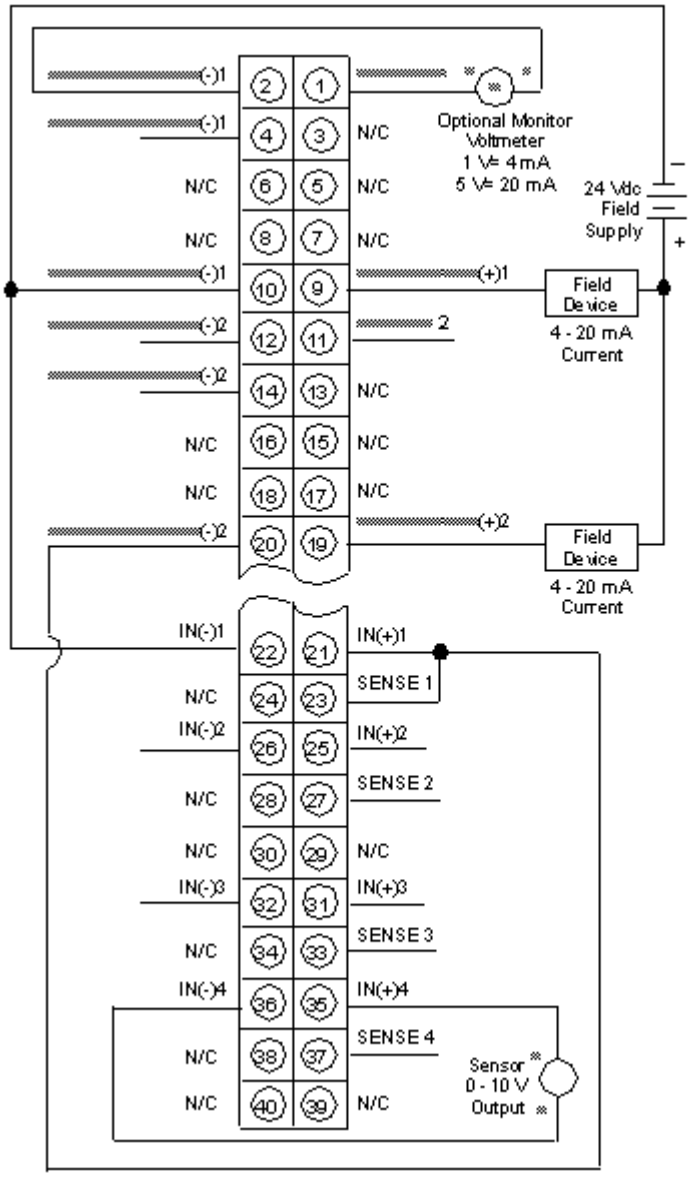

N/C Not Connected

- Jumpers are required between IN (+) and SENSE terminals for all current input ranges.
- Pins 1 ... 20 are outputs.
  Pins 21 ... 40 are inputs.
- For Inputs, the maximum channel to channel working voltage cannot exceed 30 Vdc.