Product datasheet

Specifications

Green Premium™

discrete input module Modicon Quantum - 32 I - 24 V AC

140DAI35300

Discontinued on: 31 Dec 2021

To be end-of-service on: 31 Dec 2029

Discontinued - Service only

Main

Range Of Product	Modicon Quantum automation platform
Product Or Component Type	VAC discrete input modules
Software Name	ProWORX 32 Concept Unity Pro
Discrete Input Number	32

Complementary

Group Of Channels	4
Addressing Requirement	2 input words
Discrete Input Voltage	24 V AC
Input Current	11.1 mA at 57...63 Hz 13.2 mA at 47...53 Hz
Voltage State 1 Guaranteed	12...30 V AC at 57...63 Hz 14...30 V AC at 47...53 Hz
Voltage State 0 Guaranteed	0...5 V at 57...63 Hz 0...5 V at 47...53 Hz
Input Impedance	2600 Ohm capacitive at 57...63 Hz 3100 Ohm capacitive at 47...53 Hz
Network Frequency Limits	47…63 Hz
Maximum Leakage Current	1.9 mA
Absolute Maximum Input	30 V continuous 32 V 10 s 50 V 1 cycle
Response Time	4.9...0.75 ms x line cycle Off-On 7.3...12.3 ms On-Off
Isolation Between Group	1780 Vrms for 1 minute
Isolation Between Group And Bus	1780 Vrms for 1 minute
Bus Current Requirement	250 mA
Maximum Power Dissipation In W	10.9 W
Local Signalling	1 LED (green) for bus communication is present (Active) 1 LED (red) for external fault detected (F) 32 LEDs (green) for input status
Marking	CE
Module Format	Standard
Net Weight	0.34 kg

Disclaimer: This documentation is not intended as a substitute for and is not to be used for determining suitability or reliability of these products for specific user applications

Environment

Standards	UL 508 CSA C22.2 No 142
Product Certifications	FM Class 1 Division 2 cUL
Resistance To Electrostatic Discharge	4 kV contact conforming to IEC 801-2 8 kV on air conforming to IEC 801-2
Resistance To Electromagnetic Fields	10 V/m 80…2000 MHz conforming to IEC 801-3
Ambient Air Temperature For Operation	0…60 °C
Ambient Air Temperature For Storage	-40…85 °C
Relative Humidity	95 % without condensation
Operating Altitude	<= 5000 m

Packing Units

Unit Type Of Package 1	PCE
Number Of Units In Package 1	1
Package 1 Height	16.3 cm
Package 1 Width	4.5 cm
Package 1 Length	31.2 cm
Package 1 Weight	475.0 g
Unit Type Of Package 2	S03
Number Of Units In Package 2	7
Package 2 Height	30.0 cm
Package 2 Width	30.0 cm
Package 2 Length	40.0 cm
Package 2 Weight	3.925 kg

Contractual warranty

Warranty	18 months

Sustainability

Green Premium™ label is Schneider Electric's commitment to delivering products with best-in-class environmental performance. Green Premium promises compliance with the latest regulations, transparency on environmental impacts, as well as circular and low-CO_2 products.

Guide to assessing product sustainability is a white paper that clarifies global eco-label standards and how to interpret environmental declarations.

Learn more about Green Premium >

Guide to assess a product's sustainability >

RoHS/REACh

Well-being performance

Reach Free Of Svhc	
Mercury Free	
Rohs Exemption Information	Yes

Certifications & Standards

Eu Rohs Directive	Pro-active compliance (Product out of EU RoHS legal scope) EU RoHS Declaration
China Rohs Regulation	China RoHS declaration
Weee	The product must be disposed on European Union markets following specific waste collection and never end up in rubbish bins
Circularity Profile	End of Life Information

Dimensions Drawings

Racks for Modules Mounting

Dimensions of Modules and Racks

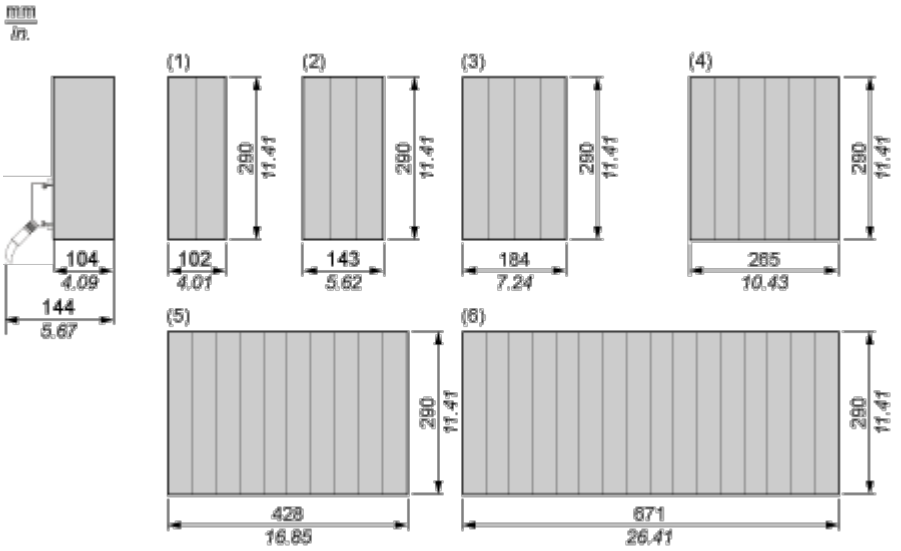

(1) 2 slots

(2) 3 slots

(3) 4 slots

(4) 6 slots

(5) 10 slots

(6) 16 slots

Connections and Schema

24 Vac Discrete Input Module

Wiring Diagram

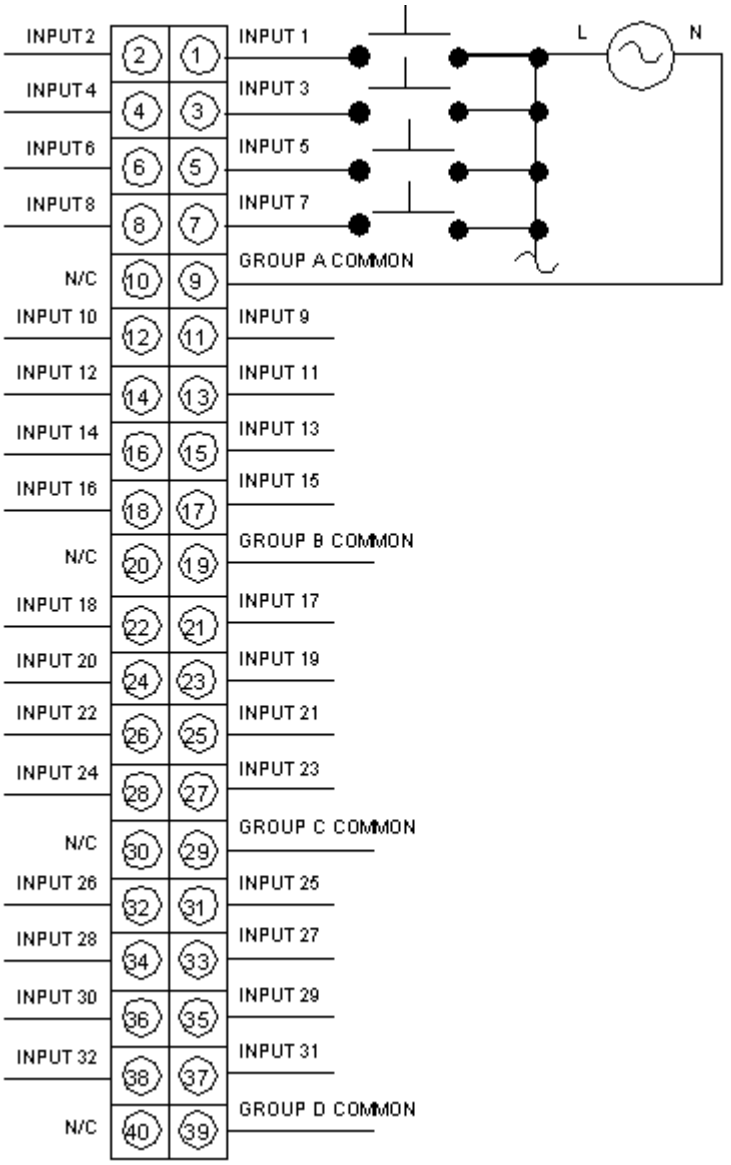

N/C Not Connected