Product datasheet

Specifications

Modular box PC, Harmony iPC, Optimized DC 4 GB M.2 DC Windows

HMIBMOMA5DDF10L

Main

Range Of Product	Harmony iPC
Product Or Component Type	Modular box PC
Device Short Name	Modular BOX PC Optimized Expandable
Range Compatibility	IDisplay Modular Display HMIDM
Accessory / Separate Part Destination	PC panel on HMIDM modular display
Processor Name	Intel Atom E3930 upto 1.8 GHz
Operating System	Windows 10 IoT Enterprise 64 bitmulti-language
Software Package	Node-RED and system nodes restore IIoT Wiring Operating System Restore McAfee white listing installer cyber security license not included EcoStruxture secure connect advisor annual subscription cyber security license not included EcoStruxure Operator Terminal Expert run time HMI license not included EcoStruxure machine SCADA expert run time HMI/SCADA on configured offer only EcoStruxure augmented operator advisor server augmented operator license not included

Complementary

Mounting Location	Book mounting Flat mounting Wall mounting
Data Storage Equipment	250 GB M.2 SSD TLC for 1500000 h
Memory Description	4 GB RAM DDR3 internal (not expandable)
Free Slots	1 M.2 SSD 1.0 Internal SATA HDD/SSD with adapter HMIYBADHDDBMO1 to mount .
Number Of Slots	1 slot(s) for mini PCI Express full-size without optional interface plate,
Number Of Slots Available For Expansion	1.0 slot(s) for mini PCIe
Display Resolution	3200 x 2000 pixels at 60 Hz
Watchdog Timer	1…255 ms
Type Of Cooling	Fanless
Electrical Connection	Screw connector, connector type: pin, 1 way, circuit application: ground - location: bottom Connector, connector type: SMA, 3 ways - location: top

Disclaimer: This documentation is not intended as a substitute for and is not to be used for determining suitability or reliability of these products for specific user applications

Integrated Connection Type	Display port with 2 on front Ethernet with 2 RJ45 I210, transmission rate: 10/100/1000 Mbps on bottom IEEE 1588 supported COM1 serial link for battery backup with 1 male SUB-D 9 RS232 on bottom COM2 serial link with 1 male SUB-D 9 RS232/422/485 on bottom non-isolated USB 2.0 port with 2 USB type A, transmission rate: 480 Mbit/s on bottom non-isolated USB 3.0 port with 2 USB type A, transmission rate: 5 Gbit/s on bottom TPM connector Ver 2.0 for cyber security - hardware encryption TPM module HMIYMINATPM201 to be installed/default installed on motherboard
Cyber Secured Boot	Secure password boot UEFI
[Us] Rated Supply Voltage	24 V DC power supply 100...240 V AC power supply
Supply Voltage Limits	9.6…28.8 V
Inrush Current	2.03 A
Power Consumption In W	25.0 W (box) 17.0 W (with 4:3 12" display HMIDM6421) 17.0 W (with Wide 12" display HMIDM6521) 18.0 W (with 4:3 15" display HMIDM7421) 20.0 W (with Wide 15" display HMIDM7521) 21.0 W (with Wide 19" display HMIDM9521) 22.0 W (with Wide 22" display HMIDMA521)
Control Type	ON/OFF button
Impregnation Material	Conformal coated
Main Type	Optimised
Depth	54 mm
Height	150 mm
Width	187 mm
Net Weight	1.3 kg

Environment

Environmental Characteristic	Hazardous location with additional adaptor HMIYMMAC1
Standards	Class A group 1 EN 55011 EN 61000-6-4 EN 61131-2 FCC part 15 UL 61010
Product Certifications	CE CULus CULus CSA 22-2 No 142 CULus HazLoc Class I Division 2 ANSI/ISA 12-12-01 CULus HazLoc Class I Division 2 CSA 22-2 No 213 ATEX CCC RCM EAC IEC Ex hazardous locations 3GD zone 2/22
Quality Labels	CE
Directives	2004/108/EC - electromagnetic compatibility 2006/95/EC - low voltage directive
Ip Degree Of Protection	IP40 conforming to IEC 60529
Electromagnetic Compatibility	Immunity to high frequency interference conforming to IEC 61000-4 Disturbing field emission class A conforming to EN 55011 Conducted and radiated emissions class A conforming to EN 55022
Ambient Air Temperature For Storage	-30…70 °C conforming to IEC 60068-2-2 -30…70 °C conforming to IEC 60068-2-14
Relative Humidity	10…95 % non-condensing conforming to EN/IEC 60068-2-30

Ambient Air Temperature For Operation	0…55 °C (by default) conforming to EN/IEC 60068-2-2 0…55 °C flat mounting 0…50 °C on HDD 0…50 °C flat mounting on HDD
Operating Altitude	2000 m conforming to IEC 60664-1
Vibration Resistance	2 gn (f = 5…500 Hz) M.2 SSD 1 gn (f = 5…500 Hz) HDD

Packing Units

Unit Type Of Package 1	PCE
Number Of Units In Package 1	1
Package 1 Height	15.0 cm
Package 1 Width	23.5 cm
Package 1 Length	37.5 cm
Package 1 Weight	2.102 kg
Unit Type Of Package 2	S04
Number Of Units In Package 2	3
Package 2 Height	30.0 cm
Package 2 Width	40.0 cm
Package 2 Length	60.0 cm
Package 2 Weight	7.0 kg

Sustainability

Green Premium™ label is Schneider Electric's commitment to delivering products with best-in-class environmental performance. Green Premium promises compliance with the latest regulations, transparency on environmental impacts, as well as circular and low-CO_2 products.

Guide to assessing product sustainability is a white paper that clarifies global eco-label standards and how to interpret environmental declarations.

Learn more about Green Premium >

Guide to assess a product's sustainability >

Transparency RoHS/REACh

Well-being performance

- Reach Free Of Svhc
- Mercury Free
- Rohs Exemption Information — Yes

Certifications & Standards

Reach Regulation	REACh Declaration
Eu Rohs Directive	Pro-active compliance (Product out of EU RoHS legal scope)
China Rohs Regulation	China RoHS declaration
Environmental Disclosure	Product Environmental Profile
Weee	The product must be disposed on European Union markets following specific waste collection and never end up in rubbish bins
Circularity Profile	End of Life Information

Dimensions Drawings

Dimensions

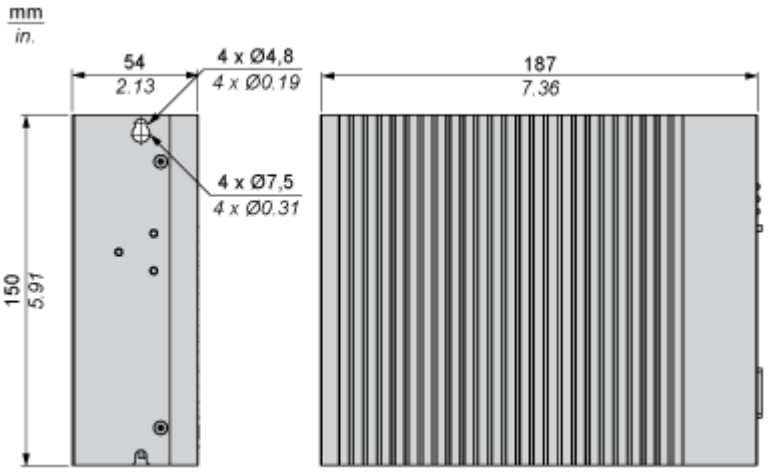

Mounting and Clearance

Spacing Requirements

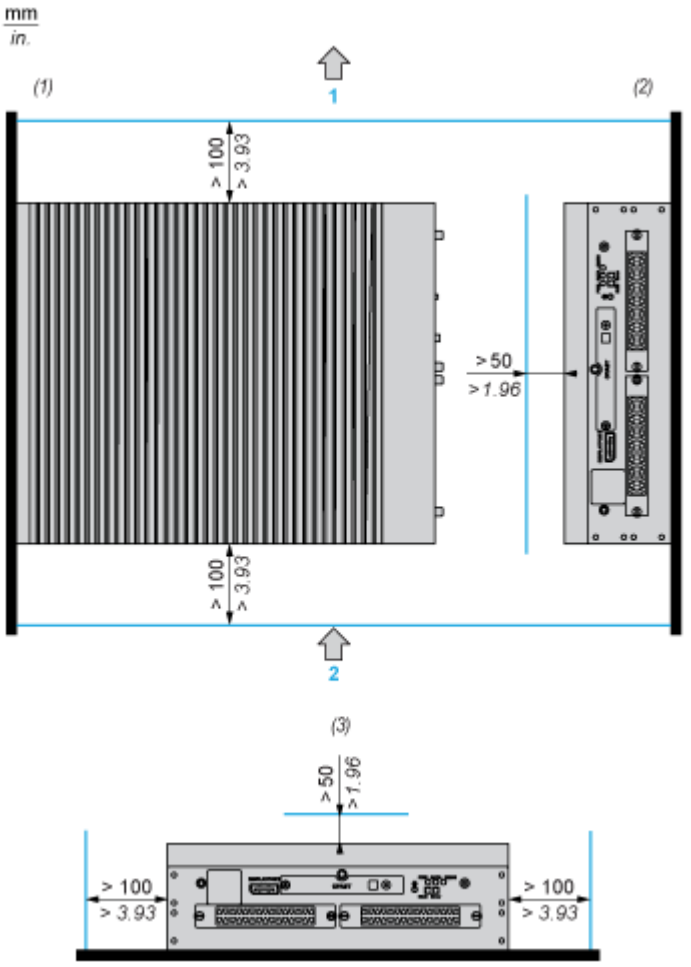

1 : Air out

2 : Air in

(1) Book mounting : Vertical mounting with rear fixing

(2) Wall mounting : Vertical mounting with side fixing

(3) Horizontal mounting