Product datasheet

Specifications

Green Premium™

Multi touch screen, Harmony iPC, S Panel PC Performance W19 DC N, Base unit

HMIPSP0952D1001

Main

Range Of Product	Harmony iPC
Product Or Component Type	Multi-touch screen
Processor Name	Intel Core i3 4010U at 1.7 GHz
Chipset Type	Intel QM87
Free Slots	1 Internal SATA HDD/SSD 1 CFast
Display Size	18.5 inch
Display Colour	16777216 colors
Luminance	300 cd/m²
Pixel Resolution	4096 x 4096
Video Controller Type	Intel HD Graphics 4400
Software Package	EcoStruxture secure connect advisor annual subscription cyber security license not included EcoStruxure Operator Terminal Expert run time HMI license not included EcoStruxure Machine SCADA Expert run time HMI/SCADA on configured offer only EcoStruxure augmented operator advisor server augmented operator license not included

Complementary

Number Of Points	5
Terminal Type	Touchscreen display
Memory Type	8 GB RAM DDR3 internal
Data Storage Equipment	CFast card
Aspect Ratio	16:9
Display Type	Colour TFT LCD LED
Display Resolution	1366 x 768 pixels WXGA
Backlight Lifespan	50000 hours
View Angle Horizontal X Vertical	160 x 170°
Touch Panel	Projected capacitive technology (PCT)
Type Of Cooling	Fanless Passive
Watchdog Timer	1…255 ms
Number Of Slots	1 mini PCI Express full-size
[Us] Rated Supply Voltage	24 V DC +/- 20 % 100...240 V AC with additional adaptor HMIYPSPMAC1

Disclaimer: This documentation is not intended as a substitute for and is not to be used for determining suitability or reliability of these products for specific user applications

Power Consumption In W	28…60 W
Mechanical Robustness	Hardness anti-scratch 7H
Function Available	Operate with water on screen
Width	488 mm
Height	309 mm
Depth	56.7 mm
Cut-Out Dimensions	479.3 (+/- 1) x 300.3 (+/- 0.7)
Net Weight	7 kg
Display Size	19" wide multi-touch
Main Type	Performance

Environment

Ip Degree Of Protection	IP66 front panel:
Product Certifications	EAC CE RCM CCC AS/NZS C-Tick
Standards	IEC 60950 CISPR 11 IEC 61000-6-4 UL 60950 FCC part 15 class A CSA C22.2 No 60950 IEC 61000-6-2
Directives	2004/108/EC - electromagnetic compatibility 2006/95/EC - low voltage directive
Pollution Degree	2
Ambient Air Temperature For Operation	0…55 °C SSD 0…55 °C Cfast card 0…45 °C HDD
Ambient Air Temperature For Storage	-20…60 °C
Relative Humidity	10…95 % non-condensing
Operating Altitude	2000
Vibration Resistance	1 gn (f = 5…500 Hz)HDD

Packing Units

Unit Type Of Package 1	PCE
Number Of Units In Package 1	1
Package 1 Height	17.53 cm
Package 1 Width	55.37 cm
Package 1 Length	70.61 cm
Package 1 Weight	8.54 kg

Sustainability

Green Premium™ label is Schneider Electric's commitment to delivering products with best-in-class environmental performance. Green Premium promises compliance with the latest regulations, transparency on environmental impacts, as well as circular and low-CO_2 products.

Guide to assessing product sustainability is a white paper that clarifies global eco-label standards and how to interpret environmental declarations.

Learn more about Green Premium >

Guide to assess a product's sustainability >

Transparency RoHS/REACh

Well-being performance

- Reach Free Of Svhc
- Mercury Free
- Rohs Exemption Information — Yes

Certifications & Standards

Reach Regulation	REACh Declaration
Eu Rohs Directive	Pro-active compliance (Product out of EU RoHS legal scope)
China Rohs Regulation	China RoHS declaration
Environmental Disclosure	Product Environmental Profile
Weee	The product must be disposed on European Union markets following specific waste collection and never end up in rubbish bins
Circularity Profile	End of Life Information

Dimensions Drawings

Dimensions

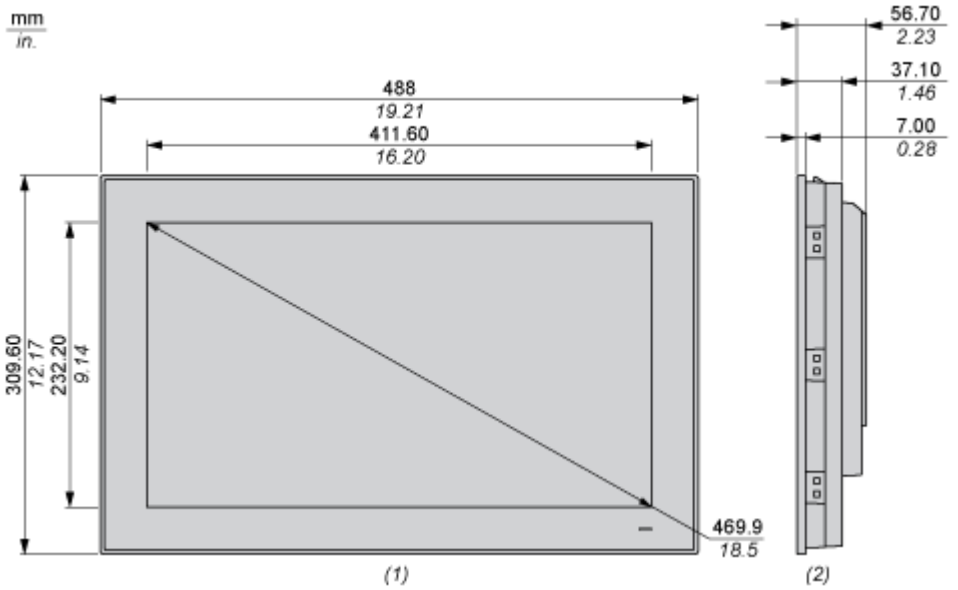

(1) Front view

(2) Side view

Mounting and Clearance

Spacing Requirements

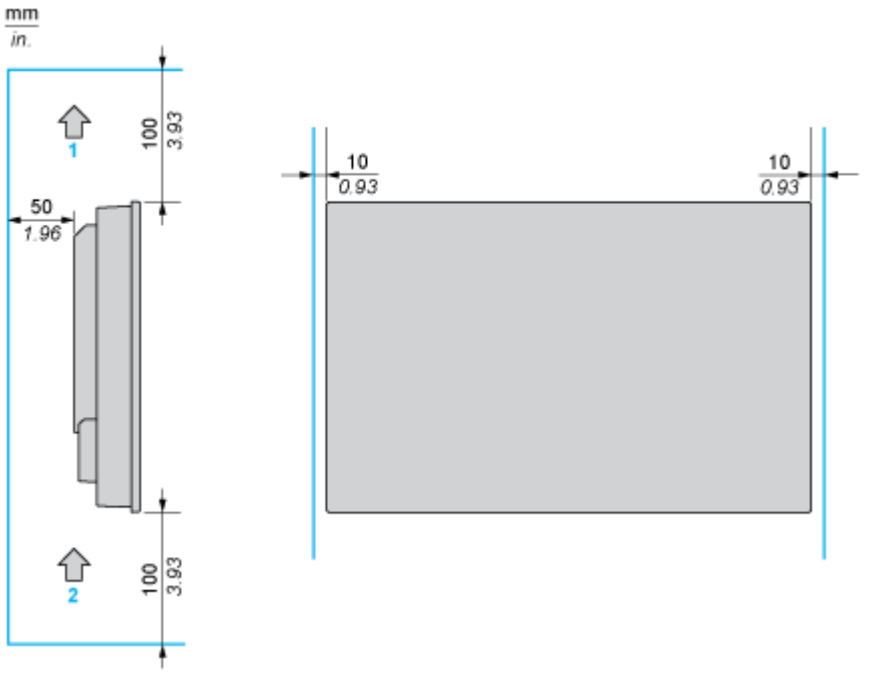

(1) Air out

(2) Air in

Mounting Orientation

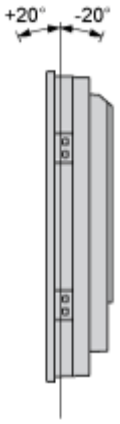

Panel Cut Dimensions

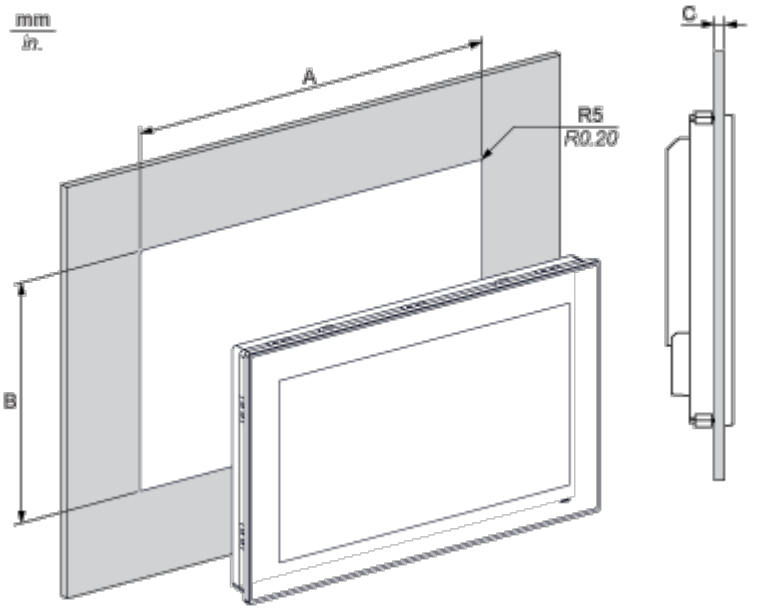

A	B	C	R
479.3 ±1 mm (18.87 ±0.04 in)	300.3 ±0.7 mm (11.82 ±0.03 in)	2...6 mm (0.08...0.23 in)	5 mm (0.20 in)