Product datasheet

Specifications

Green Premium™

3”5 color touch controller panel - Dig 8 inputs/8 outputs +Ana 4 In/2 Out

HMISCU6B5

Main

Range Of Product	Harmony SCU
Product Or Component Type	Small touch HMI controller
Display Size	3.5 inch
Display Type	with backlit LED colour TFT LCD
Touch Panel	Analogue
Device Presentation	Complete product

Complementary

Display Resolution	320 x 240 pixels QVGA
Backlight Lifespan	50000 hours with 65000 colours
Brightness	16 levels via touch panel
View Angle Horiz X Vert	60° left 60° right 40° top 60° bottom
Character Font	Chinese (simplified Chinese) ASCII Taiwanese (traditional Chinese) Korean Japanese (ANK, Kanji)
Supply	External source
[Us] Rated Supply Voltage	24 V (20.4…28.8 V)DC
Immunity To Microbreaks	10 ms
Inrush Current	30 A
Power Consumption In W	15 W
Local Signalling	No indicator
Number Of Pages	Limited by internal memory capacity
Software Designation	SoMachine
Operating System	Harmony
Processor Name	CPU RISC
Processor Frequency	333 MHz
Memory Description	Flash NAND, 128 MB Internal data storage FRAM, 128 kB Application run DRAM, 128 MB

Disclaimer: This documentation is not intended as a substitute for and is not to be used for determining suitability or reliability of these products for specific user applications

Integrated Connection Type	1 serial link - RJ45 - RS232/RS485 (rate: <= 115.2 kbits/s) 1 Ethernet TCP/IP - RJ45 1 USB 2.0 type mini B 1 USB 2.0 type A CANopen master bus - SUB-D 9
Realtime Clock	Built-in
Downloadable Protocols	Modbus TCP/IP CANopen Modbus
Fixing Mode	By 1 nut - diameter: Ø 22 mm, mounting on: 1...6 mm thick panel
Enclosure Material	PC/PBT
Shock Resistance	147 m/s² for 11 ms (on DIN rail) conforming to IEC 60068-2-27 294 m/s² for 6 ms (on panel mounting) conforming to IEC 60068-2-27
Vibration Resistance	+/- 3.5 mm (f = 5…9 Hz) conforming to IEC 60068-2-6 1 gn (f = 9…150 Hz) conforming to IEC 60068-2-6
Electromagnetic Compatibility	Electrostatic discharge immunity test - test level: 8 kV (air discharge) conforming to IEC 61000-4-2 Electrostatic discharge immunity test - test level: 6 kV (contact discharge) conforming to IEC 61000-4-2 Susceptibility to electromagnetic fields - test level: 10 V/m (80 MHz...3 GHz) conforming to IEC 61000-4-3 Electrical fast transient/burst immunity test - test level: 2 kV (power lines) conforming to IEC 61000-4-4 Electrical fast transient/burst immunity test - test level: 1 kV (between analogue I/O and operating voltage) conforming to IEC 61000-4-4 Electrical fast transient/burst immunity test - test level: 2 kV (relay wires) conforming to IEC 61000-4-4 Electrical fast transient/burst immunity test - test level: 1 kV (Ethernet line) conforming to IEC 61000-4-4 Electrical fast transient/burst immunity test - test level: 1 kV (COM line) conforming to IEC 61000-4-4 Electrical fast transient/burst immunity test - test level: 1 kV (CAN line) conforming to IEC 61000-4-4 Surge immunity test - test level: 2 kV (power supply (common mode)) conforming to IEC 61000-4-5 Surge immunity test - test level: 1 kV (power supply (differential mode)) conforming to IEC 61000-4-5 Surge immunity test - test level: 1 kV common mode (digital I/O) conforming to IEC 61000-4-5 Surge immunity test - test level: 0.5 kV differential mode (digital I/O) conforming to IEC 61000-4-5 Conducted RF disturbances - test level: 10 V (0.15...80 MHz) conforming to IEC 61000-4-6 Conducted emission - test level: 150 kHz...30 MHz conforming to EN 55011 Radiated emission - test level: 30 MHz...1 GHz conforming to EN 55011
Discrete Input Number	2 for fast input (normal mode) conforming to IEC 61131-2 Type 1 6 for digital input conforming to IEC 61131-2 Type 1
Discrete Input Voltage	24 V DC, discrete input logic: sink or source (positive/negative)
Number Of Common Point	1 for fast input (HSC mode) 1 for digital input
Discrete Input Current	7.83 mA for fast input 5 mA for digital
Input Impedance	2.81 kOhm 4.7 kOhm
Sensor Power Supply	15…28.8 V DC >= 15 V, current (state 1): >= 5 mA <= 5 V, current (state 0): <= 1.5 mA 15…28.8 V DC >= 15 V, current (state 1): >= 2.5 mA <= 5 V, current (state 0): <= 1 mA
Configurable Filtering Time	0 ms no filter (none) 0.004...0.04 ms bounce filter (latch/event and cumulative filter by step Nx0.5ms (64>=N>=2)) 3...12 ms integrator (none/run/stop)
Maximum Input Frequency	100 kHz for fast input (encoder mode) - control type A/B 100 kHz for fast input - control type single phase 100 kHz for fast input - control type pulse/direction

Maximum Cable Distance Between Devices	Shielded cable: <10 m for fast input Shielded cable: <100 m for digital input Unshielded cable: <50 m for digital input
Connection Pitch	3.5 mm
Overvoltage Protection	With overvoltage protection
Isolation Between Channels And Internal Logic	500 V DC
Isolation Between Channels	None
Discrete Output Number	2 fast output (normal mode), output logic: source 6 digital output, output logic: source
Discrete Output Voltage	24 V DC (voltage limit: 19.2...28.8 V) with transistor discrete output(s) 24 V DC (voltage limit: 5...30 V) with relay discrete output(s) 220 V AC (voltage limit: 100...250 V) with relay discrete output(s)
Input/Output Number	2 for fast input, terminal(s): FI0...FI1 2 for fast output, terminal(s): FQ0...FQ1 6 for digital input, terminal(s): DI0...DI5 6 for digital output, terminal(s): DQ0...DQ5
Discrete Output Current	2 A 4 A), response time 5 ms with opening contact for digital output 2 A 4 A), response time 2 ms with closing contact for digital output 300 mA, response time 2 ms for fast output (normal mode) 50 mA, response time 2 ms for fast output (PWM or PTO mode)
Insulation Resistance	> 10 MOhm between the I/O and internal logic > 10 MOhm between power supply and earth
Maximum Output Frequency	100 kHz for fast output (PTO mode) 1 kHz for fast output (PWM mode)
Absolute Accuracy Error	+/- 0.1 % of full scale cyclic ratio 1...99% for fast output (PWM or PTO mode) 1 % of full scale cyclic ratio 1...99% for fast output (PWM or PTO mode) +/- 5 % of full scale cyclic ratio 10...90% for fast output (PWM or PTO mode) +/- 10 % of full scale cyclic ratio 20...80% for fast output (PWM or PTO mode) +/- 15 % of full scale cyclic ratio 30...70% for fast output (PWM or PTO mode)
Analogue Input Number	2 for analog input 2 for RTDs
Analogue Input Range	0...20 mA/4...20 mA - resolution: 12 bits, input impedance: 250 Ohm (tolerance: +/- 1 %) -10...+10 V or 0...10 V - resolution: 12 bits + sign, input impedance: >= 1 MOhm
Analogue Input Type	RTD at - 200...600 °C - resolution: 16 bits temperature probe: Pt 100/Pt 1000 RTD at - 50...200 °C - resolution: 16 bits temperature probe: Ni 100/Ni 1000 RTD at - 200...760 °C - resolution: 16 bits (thermocouple J) RTD at - 240...1370 °C - resolution: 16 bits (thermocouple K) RTD at 0...1600 °C - resolution: 16 bits (thermocouple R) RTD at 200...1800 °C - resolution: 16 bits (thermocouple B) RTD at 0...1600 °C - resolution: 16 bits (thermocouple S) RTD at - 200...400 °C - resolution: 16 bits (thermocouple T) RTD at - 200...900 °C - resolution: 16 bits (thermocouple E) RTD at - 200...1300 °C - resolution: 16 bits (thermocouple N)
Analogue Output Number	2 resistive load for 12 bits + sign
Analogue Output Range	0...20 mA/4...20 mA (> 300 Ohm) for open-circuit -10...10 V/0...10 V (> 2 kOhm) for short-circuit
Height	74.95 mm
Width	128 mm
Depth	102 mm
Net Weight	0.551 kg

Environment

Standards	CSA C22.2 No 213 Class I Division 2 EN 61131-2 IEC 61000-6-2 ANSI/ISA 12-12-01 UL 508 FCC Class A
Product Certifications	cULus CSA 22-2 No 142 cUL 1604 Class 1 Division 2 C-Tick GOST KCC cULus 508 UKCA UKEX
Marking	CE
Ambient Air Temperature For Operation	0…50 °C
Ambient Air Temperature For Storage	-20…60 °C
Relative Humidity	5…85 % without condensation
Operating Altitude	<= 2000 m
Storage Altitude	0…10000 m
Maximum Pressure	800...1114 hPa
Ip Degree Of Protection	IP20 (rear panel) conforming to IEC 60529 IP65 (front panel) conforming to IEC 60529
Nema Degree Of Protection	NEMA 4X front panel
Pollution Degree	2 conforming to IEC 60664
Environmental Characteristic	Corrosive gas free

Packing Units

Unit Type Of Package 1	PCE
Number Of Units In Package 1	1
Package 1 Height	11.500 cm
Package 1 Width	18.600 cm
Package 1 Length	27.000 cm
Package 1 Weight	1.169 kg
Unit Type Of Package 2	S03
Number Of Units In Package 2	4
Package 2 Height	30.000 cm
Package 2 Width	30.000 cm
Package 2 Length	40.000 cm
Package 2 Weight	5.153 kg
Unit Type Of Package 3	P12
Number Of Units In Package 3	64
Package 3 Height	73.000 cm
Package 3 Width	80.000 cm
Package 3 Length	120.000 cm
Package 3 Weight	93.448 kg

Sustainability

Green Premium™ label is Schneider Electric's commitment to delivering products with best-in-class environmental performance. Green Premium promises compliance with the latest regulations, transparency on environmental impacts, as well as circular and low-CO_2 products.

Guide to assessing product sustainability is a white paper that clarifies global eco-label standards and how to interpret environmental declarations.

Learn more about Green Premium >

Guide to assess a product's sustainability >

Transparency RoHS/REACh

Resource performance

Upgradeable Through Digital Modules And Upgraded Components

Well-being performance

Mercury Free

Rohs Exemption Information	Yes

Certifications & Standards

Reach Regulation	REACh Declaration
Eu Rohs Directive	Pro-active compliance (Product out of EU RoHS legal scope)
China Rohs Regulation	China RoHS declaration
Environmental Disclosure	Product Environmental Profile
Weee	The product must be disposed on European Union markets following specific waste collection and never end up in rubbish bins
Circularity Profile	End of Life Information

Dimensions Drawings

Dimensions

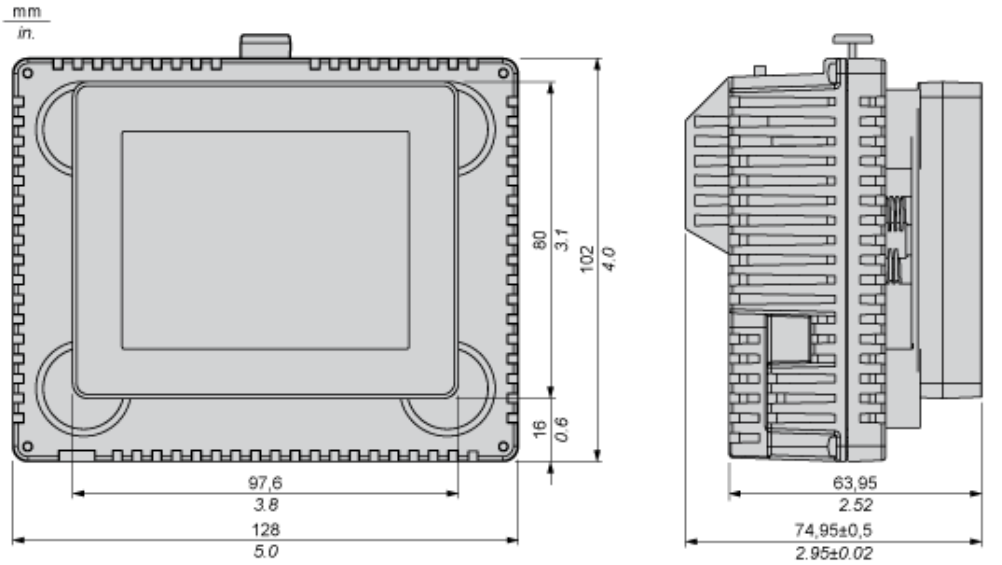

Mounting and Clearance

Recommended Mounting position

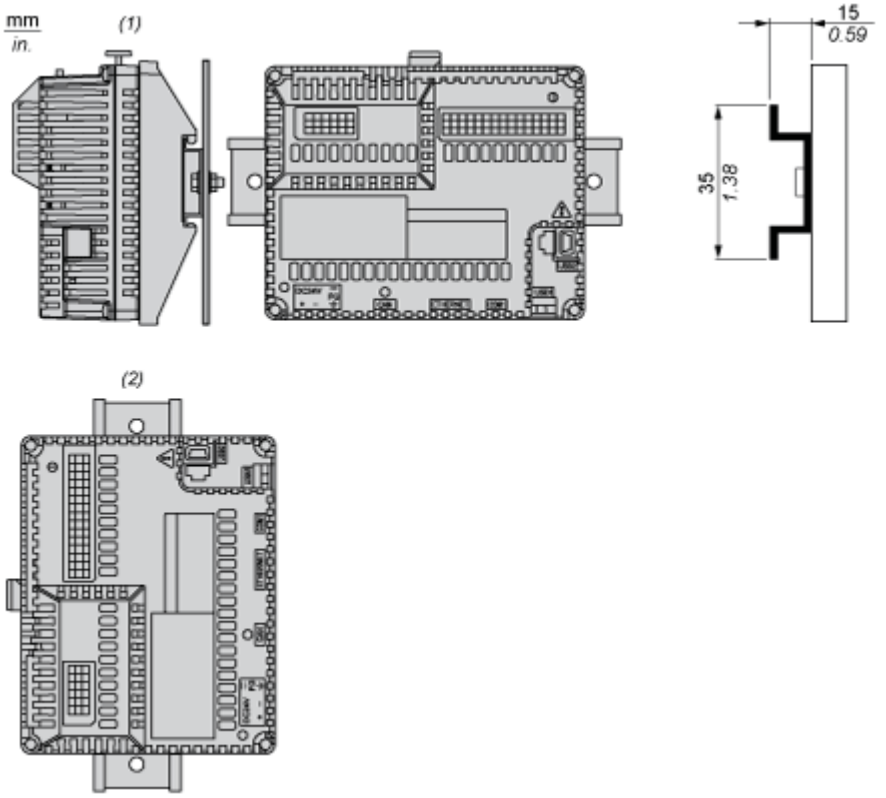

(1) Horizontal mounting

(2) Vertical mounting

No Recommended Mounting Position

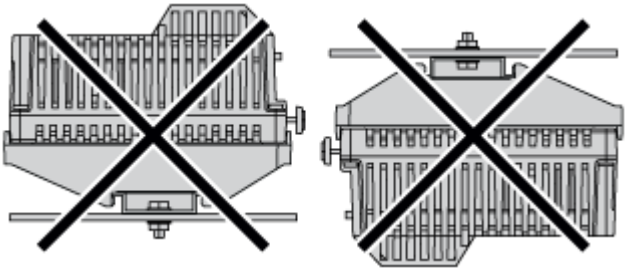

Clearance

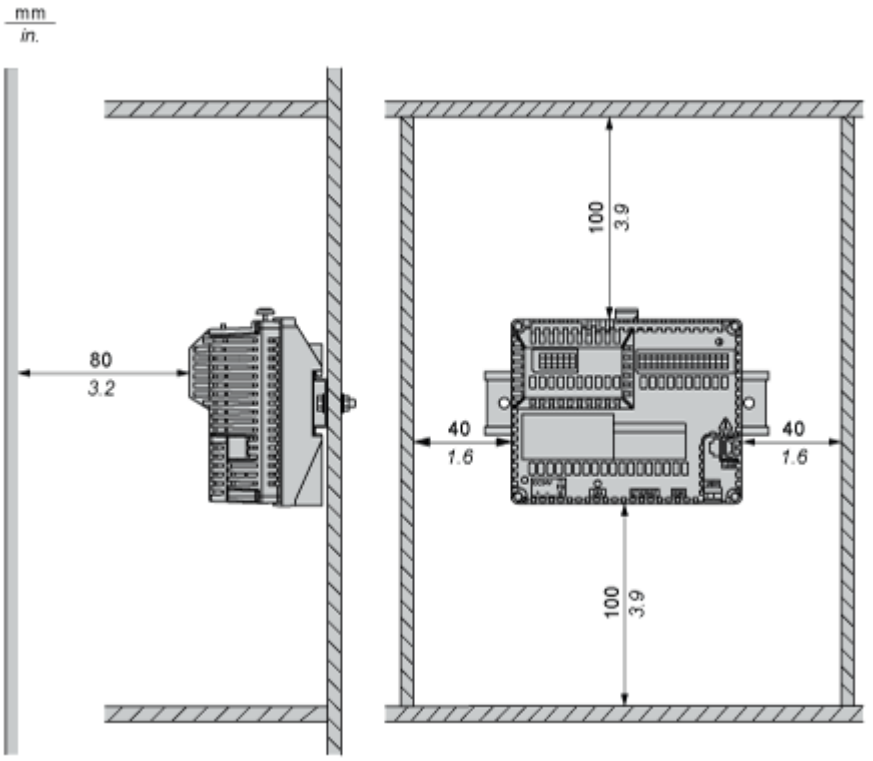

Keep adequate spacing for proper ventilation to maintain an ambient temperature between 0...50 °C (32...122 °F) for horizontal installation and 0...40 °C (32...104 °F) for vertical installation.

Connections and Schema

Wiring Diagram

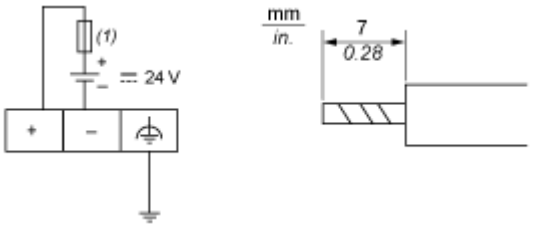

(1) Slow-blow 2A type T fuse

Wiring Diagram of the Analog Inputs and Analog Outputs

Voltage for Analog Inputs

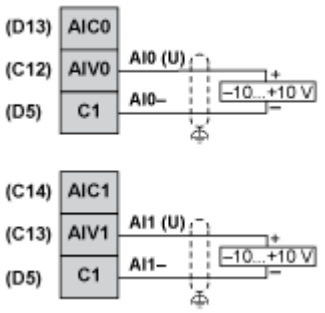

Current for Analog Inputs

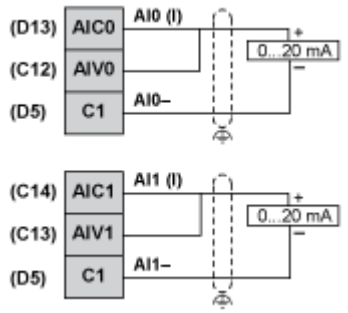

Voltage and Current for Analog Outputs

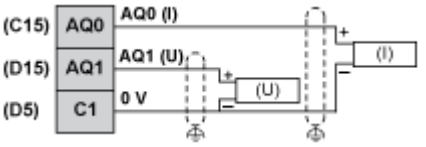

3 Wiring for Analog Inputs PT100

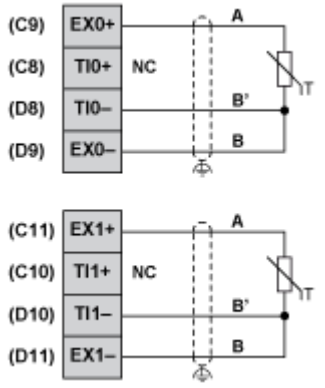

2 Wiring for Analog Inputs PT100

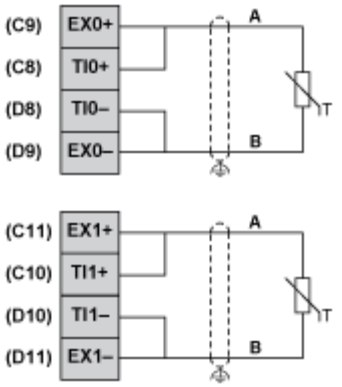

Thermocouple

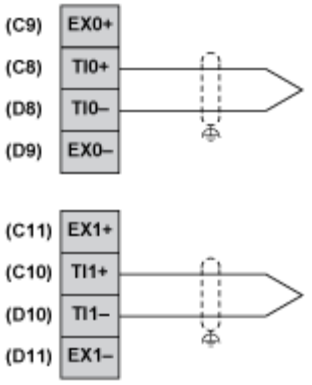

Wiring Diagram of Digital Inputs

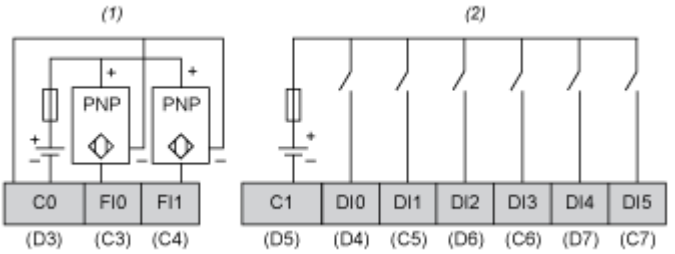

(1) HSC inputs with pin assignment of terminal blocks C,D.

(2) Digital inputs with pin assignment of terminal blocks C,D.

Wiring Diagram of Digital Outputs

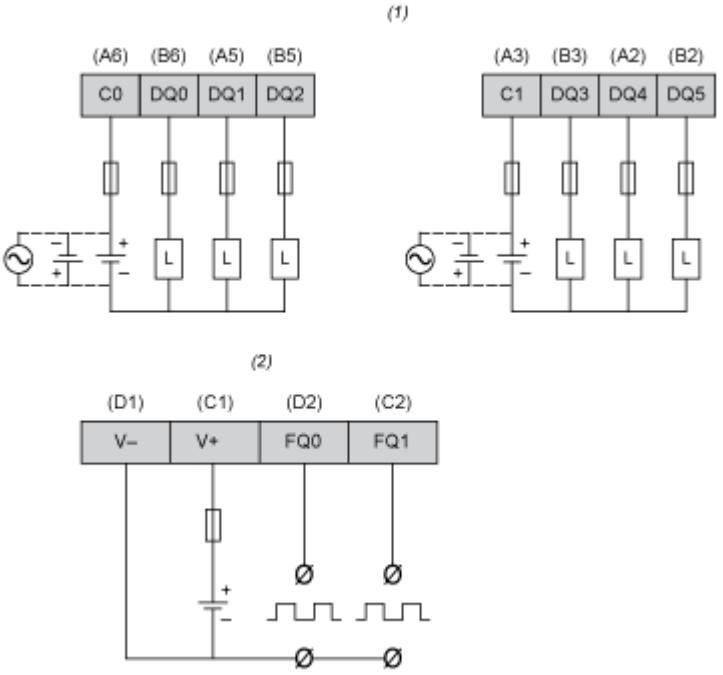

(1) Digital outputs with pin assignment of terminal blocks A,B.

(2) PWM outputs with pin assignment of terminal blocks C,D.