Product datasheet

Specifications

Zelio Logic, Compact smart relay, 12 I/O, 24 V DC, clock, display

SR2B122BD

Main

Range Of Product	Zelio Logic
Product Or Component Type	Compact smart relay

Complementary

Local Display	With
Number Or Control Scheme Lines	0…240 with ladder programming 0…500 with FBD programming
Cycle Time	6…90 ms
Backup Time	10 years at 25 °C
Clock Drift	12 min/year at 0…55 °C 6 s/month at 25 °C
Checks	Program memory on each power up
[Us] Rated Supply Voltage	24 V DC
Supply Voltage Limits	19.2…30 V
Maximum Supply Current	100 mA (without extension)
Power Dissipation In W	3 W without extension
Reverse Polarity Protection	With
Discrete Input Number	8 conforming to IEC 61131-2 Type 1
Discrete Input Type	Resistive
Discrete Input Voltage	24 V DC
Discrete Input Current	4 mA
Counting Frequency	1 kHz for discrete input
Voltage State 1 Guaranteed	>= 15 V for I1...IA and IH...IR discrete input circuit >= 15 V for IB...IG used as discrete input circuit
Voltage State 0 Guaranteed	<= 5 V for I1...IA and IH...IR discrete input circuit <= 5 V for IB...IG used as discrete input circuit
Current State 1 Guaranteed	>= 1.2 mA (IB...IG used as discrete input circuit) >= 2.2 mA (I1...IA and IH...IR discrete input circuit)
Current State 0 Guaranteed	<= 0.75 mA (I1...IA and IH...IR discrete input circuit)
Input Compatibility	3-wire proximity sensors PNP for discrete input
Analogue Input Number	4
Analogue Input Type	Common mode
Analogue Input Range	0...24 V 0...10 V

Disclaimer: This documentation is not intended as a substitute for and is not to be used for determining suitability or reliability of these products for specific user applications

Temperature Probe Type	NTC 10k at 25 °C NTC 1000k at 25 °C KTY81 210/220/221/222/250 Pt 500
Maximum Permissible Voltage	30 V for analogue input circuit
Analogue Input Resolution	8 bits
Lsb Value	39 mV for analogue input circuit
Conversion Time	Smart relay cycle time for analogue input circuit
Conversion Error	+/- 5 % at 25 °C for analogue input circuit +/- 6.2 % at 55 °C for analogue input circuit
Repeat Accuracy	+/- 2 % at 55 °C for analogue input circuit
Operating Distance	10 m between stations, with screened cable (sensor not isolated) for analogue input circuit
Input Impedance	12 kOhm for IB...IG used as analogue input circuit 12 kOhm for IB...IG used as discrete input circuit 7.4 kOhm for I1...IA and IH...IR discrete input circuit
Number Of Outputs	4 transistor
Output Voltage	24 V transistor output
Output Voltage Limits	19.2...30 V DC (transistor output)
Load Current	0.5…0.625 A transistor output
[Ures] Residual Voltage	2 V at state 1 transistor output
Overload Protection	With overload protection for transistor output
Short-Circuit Protection	With transistor output
Overvoltage Protection	With overvoltage protection for transistor output
Clock	With
Response Time	<= 1 ms (from state 0 to state 1) for transistor output <= 1 ms (from state 1 to state 0) for transistor output
Connections - Terminals	Screw terminals, 1 x 0.2...1 x 2.5 mm² (AWG 25...AWG 14) semi-solid Screw terminals, 1 x 0.2...1 x 2.5 mm² (AWG 25...AWG 14) solid Screw terminals, 1 x 0.25...1 x 2.5 mm² (AWG 24...AWG 14) flexible with cable end Screw terminals, 2 x 0.2...2 x 1.5 mm² (AWG 24...AWG 16) solid Screw terminals, 2 x 0.25...2 x 0.75 mm² (AWG 24...AWG 18) flexible with cable end
Tightening Torque	0.5 N.m
Overvoltage Category	III conforming to IEC 60664-1
Net Weight	0.22 kg

Environment

Immunity To Microbreaks	1 ms
Product Certifications	C-Tick UL GL CSA GOST
Standards	IEC 60068-2-6 Fc IEC 61000-4-12 IEC 60068-2-27 Ea IEC 61000-4-6 level 3 IEC 61000-4-4 level 3 IEC 61000-4-5 IEC 61000-4-11 IEC 61000-4-3 IEC 61000-4-2 level 3

Ip Degree Of Protection	IP20 (terminal block) conforming to IEC 60529 IP40 (front panel) conforming to IEC 60529
Environmental Characteristic	EMC directive conforming to IEC 61000-6-2 EMC directive conforming to IEC 61000-6-3 EMC directive conforming to IEC 61000-6-4 EMC directive conforming to IEC 61131-2 zone B Low voltage directive conforming to IEC 61131-2
Disturbance Radiated/Conducted	Class B conforming to EN 55022-11 group 1
Pollution Degree	2 conforming to IEC 61131-2
Ambient Air Temperature For Operation	-20…40 °C in non-ventilated enclosure conforming to IEC 60068-2-1 and IEC 60068-2-2 -20…55 °C conforming to IEC 60068-2-1 and IEC 60068-2-2
Ambient Air Temperature For Storage	-40…70 °C
Operating Altitude	2000 m
Maximum Altitude Transport	3048 m
Relative Humidity	95 % without condensation or dripping water

Packing Units

Unit Type Of Package 1	PCE
Number Of Units In Package 1	1
Package 1 Height	6.5 cm
Package 1 Width	8.8 cm
Package 1 Length	10.0 cm
Package 1 Weight	206.0 g
Unit Type Of Package 2	S03
Number Of Units In Package 2	30
Package 2 Height	30.0 cm
Package 2 Width	30.0 cm
Package 2 Length	40.0 cm
Package 2 Weight	6.836 kg

Contractual warranty

Warranty	18 months

Sustainability

Green Premium™ label is Schneider Electric's commitment to delivering products with best-in-class environmental performance. Green Premium promises compliance with the latest regulations, transparency on environmental impacts, as well as circular and low-CO_2 products.

Guide to assessing product sustainability is a white paper that clarifies global eco-label standards and how to interpret environmental declarations.

Learn more about Green Premium >

Guide to assess a product's sustainability >

Transparency RoHS/REACh

Well-being performance

Mercury Free	
Rohs Exemption Information	Yes
Pvc Free	

Certifications & Standards

Reach Regulation	REACh Declaration
Eu Rohs Directive	Pro-active compliance (Product out of EU RoHS legal scope)
China Rohs Regulation	China RoHS declaration
Environmental Disclosure	Product Environmental Profile
Weee	The product must be disposed on European Union markets following specific waste collection and never end up in rubbish bins
Circularity Profile	End of Life Information

Dimensions Drawings

Compact and Modular Smart Relays

Mounting on 35 mm/1.38 in. DIN Rail

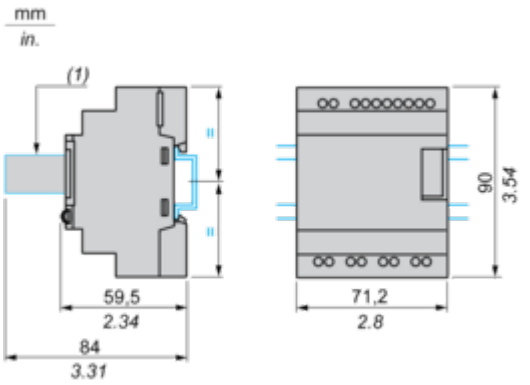

(1) With SR2USB01 or SR2BTC01

Screw Fixing (Retractable Lugs)

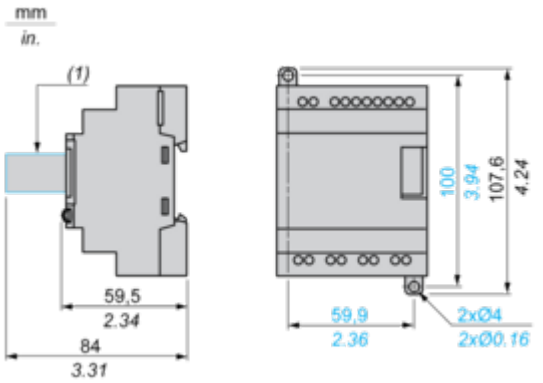

(1) With SR2USB01 or SR2BTC01

Position of Display

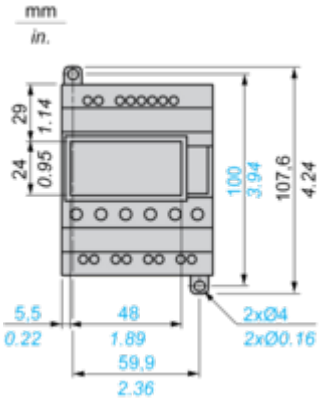

Connections and Schema

Compact and Modular Smart Relays

Connection of Smart Relays on DC Supply

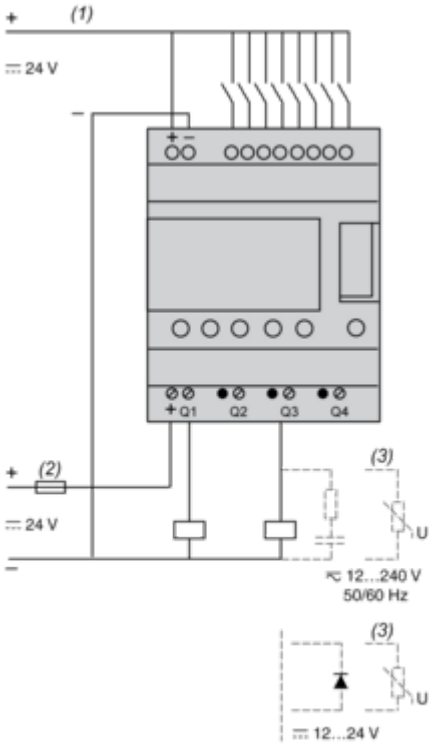

(1) 1 A quick-blow fuse or circuit-breaker.
(2) Fuse or circuit-breaker.
(3) Inductive load.
(4) Q9 and QA: 5 A (max. current in terminal C: 10 A).

Discrete Input Used for 3-Wire Sensors

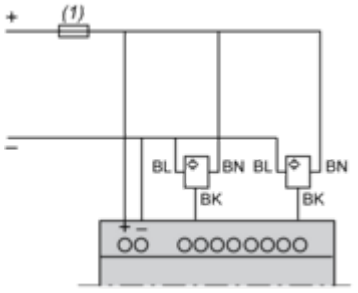

(1) 1 A quick-blow fuse or circuit-breaker.

Connection of Thermistor Input on DC Supply

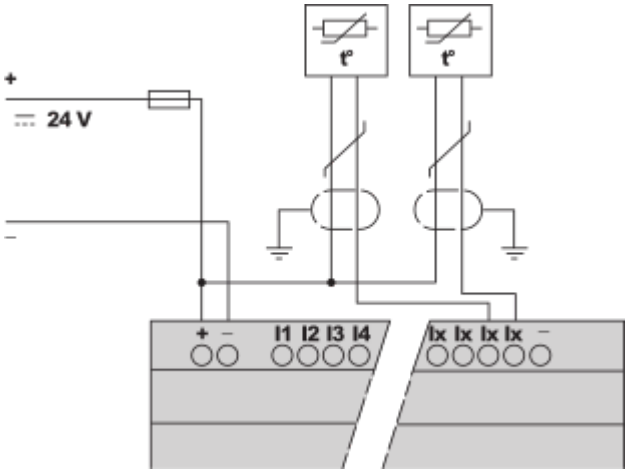

NOTE: Ix = IB...IG

Performance Curves

Compact and Modular Smart Relays

Electrical Durability of Relay Outputs

(in millions of operating cycles, conforming to IEC/EN 60947-5-1)
DC-12 (1)

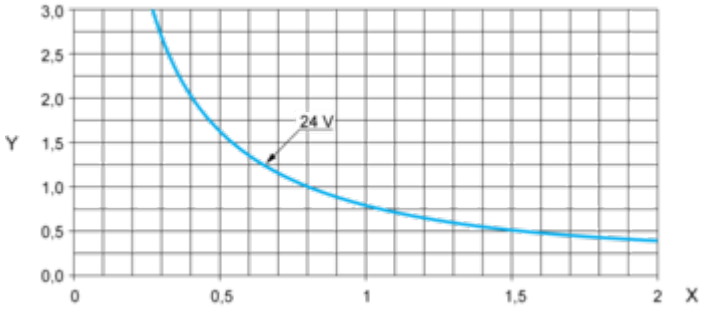

X: Current (A)
Y: Millions of operating cycles
(1) DC-12: control of resistive loads and of solid state loads isolated by opto-coupler, L/R ≤ 1 ms.

DC-13 (1)

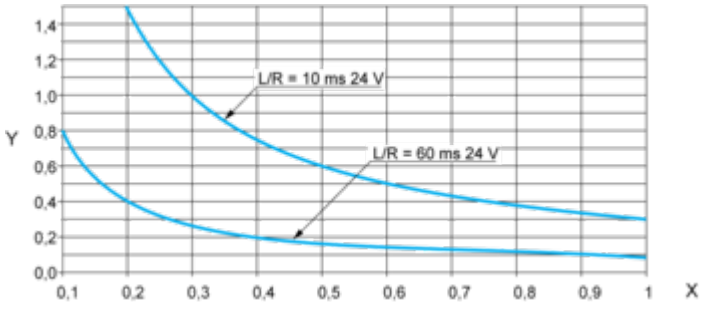

X: Current (A)
Y: Millions of operating cycles
(1) DC-13: switching electromagnets, L/R ≤ 2 x (Ue x Ie) in ms, Ue: rated operational voltage, Ie: rated operational current (with a protection diode on the load, DC-12 curves must be used with a coefficient of 0.9 applied to the number in millions of operating cycles).