Product data sheet

Specifications

motion servo drive, Lexium 28, three phase, 200 to 240V, 2kW

LXM28AU20M3X

Main

Range Of Product	Lexium 28
Device Short Name	LXM28A
Product Or Component Type	Motion servo drive
Format Of The Drive	Compact housing
Line Current	8.7 A 137.1 % 220 V, three phase

Complementary

Network Number Of Phases	Three phase
[Us] Rated Supply Voltage	200...240 V - 10...15 %)three phase
Supply Voltage Limits	200…255 V three phase
Supply Frequency	50/60 Hz - 5...5 %
Network Frequency	47.5...63 Hz
Emc Filter	Without EMC filter
Continuous Output Current	12 A 8 kHz
Output Current 3S Peak	36 A 220 V
Continuous Power	2000 W 220 V
Nominal Power	2 kW 220 V 8 kHz
Switching Frequency	8 kHz
Overvoltage Category	III
Maximum Leakage Current	1.35 mA
Output Voltage	<= power supply voltage
Electrical Isolation	Between power and control
Type Of Cable	Shielded motor cable 32…131 °F (0…55 °C)) copper
Electrical Connection	Spring terminal 3.3...4 mm², AWG 12 L1-L2) Spring terminal 3.3...4 mm², AWG 12 R, S, T) Spring terminal 3.3...4 mm², AWG 12 U, V, W, PE) Spring terminal 3.3...4 mm², AWG 12 PA/+, PBe)
Discrete Input Number	8 programmable CN1) 1 pulse train input (PTI) CN1) 2 fast capture CN1) 1 safety function STO CN9)
Discrete Input Voltage	24 V DC logic
Discrete Input Logic	Positive or negative CN1)
Discrete Output Number	5 logic output CN1)12...24 V DC 1 pulse train output (PTO) CN1)

Disclaimer: This documentation is not intended as a substitute for and is not to be used for determining suitability or reliability of these products for specific user applications

Discrete Output Voltage	12...24 V DC
Discrete Output Logic	Positive or negative CN1)
Analogue Input Number	2
Absolute Accuracy Error	0.1 %
Analogue Input Type	V_REF voltage analog input - 10...10 V 10 kOhm 14 bits T_REF voltage analog input
Control Signal Type	Servo motor encoder feedback CN2
Protection Type	Against reverse polarity inputs signal Against short-circuits outputs signal Overcurrent motor Overvoltage motor Undervoltage motor Overheating motor Overload motor Overspeed motor
Safety Function	STO (safe torque off), integrated
Safety Level	SIL 2 IEC 61800-5-2 2007 SIL 2 IEC 61508-1 2010 PL d/category 3 ISO 13849-1 2008 SIL 2 ISO 13849-1 2009/AC SIL 2 IEC 60204-1 2006 SIL 2 IEC 60204-1 2009/A1 SIL 2 IEC 60204-1 2010/AC SIL 2 IEC 62061 2012
Communication Interface	CANopen, integrated CANmotion, integrated
Connector Type	RJ45 CN4)CANopen, CANmotion
Method Of Access	Slave
Transmission Rate	250 kbit/s 328.08…820.21 ft (100…250 m) CANopen, CANmotion 500 kbit/s 13.12…328.08 ft (4…100 m) CANopen, CANmotion 1 Mbit/s 13.12 ft (4 m) CANopen, CANmotion
Number Of Addresses	1…127 CANopen, CANmotion
Physical Interface	RS485 Modbus Serial line slave
Status Led	1 LED (red) charge 1 LED (green) RUN 1 LED (red) error
Signalling Function	Servo status and fault codes five 7-segment display units
Marking	CE CSA CULus
Type Of Cooling	Integrated fan
Operating Position	Vertical
Product Compatibility	Servo motor BCH2 5.12 in (130 mm), 4 2000 W Servo motor BCH2 3.94 in (100 mm), 2 2000 W Servo motor BCH2 7.09 in (180 mm), 1 2000 W
Width	2.44 in (62 mm)
Height	6.69 in (170 mm)
Depth	7.24 in (184 mm)
Net Weight	3.75 lb(US) (1.7 kg)
Output Current 3S Peak 2	36 A 220 V
Output Current 3S Peak 3	36 A 220 V

Environment

Electromagnetic Compatibility	Conducted emission - test level: level 3 category C3 conforming to IEC 61800-3
Standards	IEC 61800-5-1
Product Certifications	cULus CSA CE
Ip Degree Of Protection	IP20
Vibration Resistance	3M4 3 mm 9…200 Hz)IEC 60721-3-3
Shock Resistance	10 gn, type I IEC 60721-3-3
Relative Humidity	5…95 % without condensation
Ambient Air Temperature For Operation	32…131 °F (0…55 °C)
Ambient Air Temperature For Storage	-13…149 °F (-25…65 °C)
Operating Altitude	<= 1000 m without derating > 1000...2000 m 1 % per 100 m

Packing Units

Unit Type Of Package 1	PCE
Number Of Units In Package 1	1
Package 1 Height	3.77 in (9.582 cm)
Package 1 Width	10.04 in (25.497 cm)
Package 1 Length	10.23 in (25.982 cm)
Package 1 Weight	4.12 lb(US) (1.87 kg)

Sustainability

Green Premium™ label is Schneider Electric's commitment to delivering products with best-in-class environmental performance. Green Premium promises compliance with the latest regulations, transparency on environmental impacts, as well as circular and low-CO_2 products.

Guide to assessing product sustainability is a white paper that clarifies global eco-label standards and how to interpret environmental declarations.

Learn more about Green Premium >

Guide to assess a product's sustainability >

Transparency RoHS/REACh

Well-being performance

Reach Free Of Svhc	
Mercury Free	
Rohs Exemption Information	Yes
Pvc Free	

Certifications & Standards

Reach Regulation	REACh Declaration
Eu Rohs Directive	Pro-active compliance (Product out of EU RoHS legal scope)
China Rohs Regulation	China RoHS declaration
Environmental Disclosure	Product Environmental Profile
Weee	The product must be disposed on European Union markets following specific waste collection and never end up in rubbish bins
Circularity Profile	End of Life Information

Dimensions Drawings

Dimensions

Dimensions of Drive

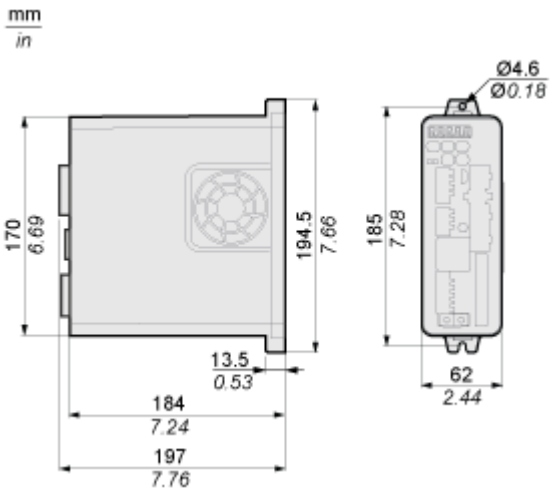

Mounting and Clearance

Mounting Clearance
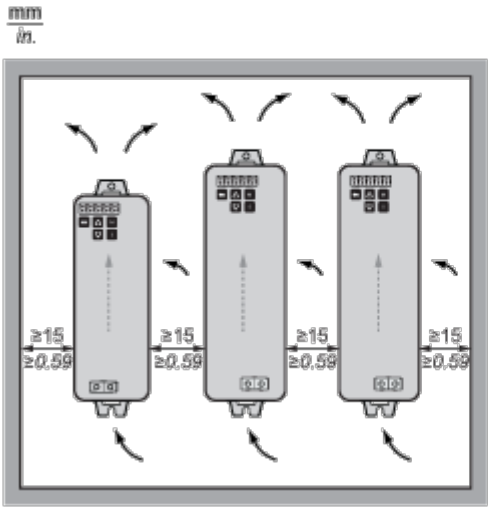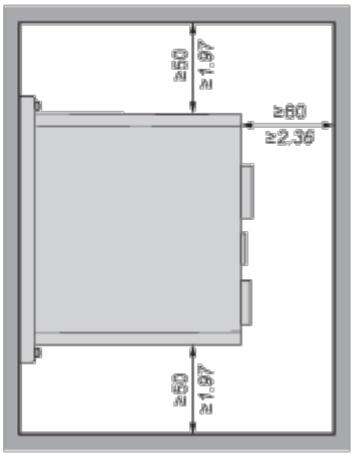
Mounting Distances and Air Circulation