Product data sheet

Specifications

Green Premium™

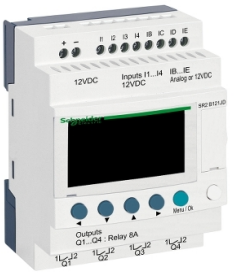

compact smart relay, Zelio Logic SR2 SR3, 12 IO, 12V DC, clock, display

SR2B121JD

Main

Range Of Product	Zelio Logic
Product Or Component Type	Compact smart relay

Complementary

Local Display	With
Number Or Control Scheme Lines	0…240 ladder 0…500 FBD
Cycle Time	6…90 ms
Backup Time	10 years 77 °F (25 °C)
Clock Drift	12 min/year 32…131 °F (0…55 °C) 6 s/month 77 °F (25 °C)
Checks	Program memory on each power up
[Us] Rated Supply Voltage	12 V DC
Supply Voltage Limits	10.4…14.4 V
Maximum Supply Current	120 mA without extension)
Power Dissipation In W	1.5 W without extension
Reverse Polarity Protection	With
Discrete Input Number	8 IEC 61131-2 Type 1
Discrete Input Type	Resistive
Discrete Input Voltage	12 V DC
Discrete Input Current	4 mA
Counting Frequency	1 kHz discrete input
Voltage State 1 Guaranteed	>= 7 V IB...IG used as discrete input circuit >= 5.6 V I1...IA and IH...IR discrete input circuit
Voltage State 0 Guaranteed	<= 3 V IB...IG used as discrete input circuit <= 2.4 V I1...IA and IH...IR discrete input circuit
Current State 1 Guaranteed	>= 2 mA I1...IA and IH...IR discrete input circuit) >= 0.5 mA IB...IG used as discrete input circuit)
Current State 0 Guaranteed	<= 0.2 mA IB...IG used as discrete input circuit) <= 0.9 mA I1...IA and IH...IR discrete input circuit)
Input Compatibility	3-wire proximity sensors PNP discrete input
Analogue Input Number	4
Analogue Input Type	Common mode
Analogue Input Range	0...10 V 0...12 V

Disclaimer: This documentation is not intended as a substitute for and is not to be used for determining suitability or reliability of these products for specific user applications

Maximum Permissible Voltage	14.4 V analogue input circuit
Analogue Input Resolution	8 bits at maximum voltage
Lsb Value	39 mV analogue input circuit
Conversion Time	Smart relay cycle time analogue input circuit
Conversion Error	+/- 5 % 77 °F (25 °C) analogue input circuit +/- 6.2 % 131 °F (55 °C) analogue input circuit
Repeat Accuracy	+/- 2 % 131 °F (55 °C) analogue input circuit
Operating Distance	10 m between stations, with screened cable (sensor not isolated) analogue input circuit
Input Impedance	14 kOhm IB...IG used as analogue input circuit 14 kOhm IB...IG used as discrete input circuit 2.7 kOhm I1...IA and IH...IR discrete input circuit
Number Of Outputs	4 relay
Output Voltage Limits	24...250 V AC relay output) 5...30 V DC relay output)
Contacts Type And Composition	NO relay output
Output Thermal Current	8 A for all 4 outputs relay output
Electrical Durability	AC-12 500000 cycles 230 V, 1.5 A relay output IEC 60947-5-1 AC-15 500000 cycles 230 V, 0.9 A relay output IEC 60947-5-1 DC-12 500000 cycles 24 V, 1.5 A relay output IEC 60947-5-1 DC-13 500000 cycles 24 V, 0.6 A relay output IEC 60947-5-1
Switching Capacity In Ma	>= 10 mA 12 V relay output)
Operating Rate In Hz	0.1 Hz at Ie)relay output 10 Hz no load)relay output
Mechanical Durability	10000000 cycles relay output
[Uimp] Rated Impulse Withstand Voltage	4 kV EN/IEC 60947-1 and EN/IEC 60664-1
Clock	With
Response Time	10 ms from state 0 to state 1)relay output 5 ms from state 1 to state 0)relay output
Connections - Terminals	Screw terminals, 1 x 0.2...1 x 2.5 mm² AWG 25...AWG 14) semi-solid Screw terminals, 1 x 0.2...1 x 2.5 mm² AWG 25...AWG 14) solid Screw terminals, 1 x 0.25...1 x 2.5 mm² AWG 24...AWG 14) flexible with cable end Screw terminals, 2 x 0.2...2 x 1.5 mm² AWG 24...AWG 16) solid Screw terminals, 2 x 0.25...2 x 0.75 mm² AWG 24...AWG 18) flexible with cable end
Tightening Torque	4.43 lbf.in (0.5 N.m)
Overvoltage Category	III IEC 60664-1
Net Weight	0.55 lb(US) (0.25 kg)

Environment

Immunity To Microbreaks	1 ms repeated 20 times
Product Certifications	C-Tick UL CSA GOST GL

Standards	IEC 61000-4-11 IEC 60068-2-6 Fc IEC 61000-4-12 IEC 61000-4-2 level 3 IEC 61000-4-5 IEC 61000-4-3 IEC 61000-4-4 level 3 IEC 60068-2-27 Ea IEC 61000-4-6 level 3
Ip Degree Of Protection	IP20 IEC 60529 terminal block) IP40 IEC 60529 front panel)
Environmental Characteristic	EMC directive IEC 61000-6-2 EMC directive IEC 61000-6-3 EMC directive IEC 61000-6-4 EMC directive IEC 61131-2 zone B Low voltage directive IEC 61131-2
Disturbance Radiated/Conducted	Class B EN 55022-11 group 1
Pollution Degree	2 IEC 61131-2
Ambient Air Temperature For Operation	-4…104 °F (-20…40 °C) in non-ventilated enclosure IEC 60068-2-1 and IEC 60068-2-2 -4…131 °F (-20…55 °C) IEC 60068-2-1 and IEC 60068-2-2
Ambient Air Temperature For Storage	-40…158 °F (-40…70 °C)
Operating Altitude	2000 m
Maximum Altitude Transport	10000.00 ft (3048 m)
Relative Humidity	95 % without condensation or dripping water

Packing Units

Unit Type Of Package 1	PCE
Number Of Units In Package 1	1
Package 1 Height	2.68 in (6.8 cm)
Package 1 Width	3.54 in (9.0 cm)
Package 1 Length	3.94 in (10.0 cm)
Package 1 Weight	8.43 oz (239.0 g)
Unit Type Of Package 2	S03
Number Of Units In Package 2	30
Package 2 Height	11.81 in (30.0 cm)
Package 2 Width	11.81 in (30.0 cm)
Package 2 Length	15.75 in (40.0 cm)
Package 2 Weight	17.14 lb(US) (7.775 kg)

Contractual warranty

Warranty	18 months

Sustainability

Green Premium™ label is Schneider Electric's commitment to delivering products with best-in-class environmental performance. Green Premium promises compliance with the latest regulations, transparency on environmental impacts, as well as circular and low-CO_2 products.

Guide to assessing product sustainability is a white paper that clarifies global eco-label standards and how to interpret environmental declarations.

Learn more about Green Premium >

Guide to assess a product's sustainability >

Transparency RoHS/REACh

Well-being performance

Mercury Free	
Rohs Exemption Information	Yes
Pvc Free	

Certifications & Standards

Reach Regulation	REACh Declaration
Eu Rohs Directive	Pro-active compliance (Product out of EU RoHS legal scope)
China Rohs Regulation	China RoHS declaration
Environmental Disclosure	Product Environmental Profile
Weee	The product must be disposed on European Union markets following specific waste collection and never end up in rubbish bins
Circularity Profile	End of Life Information

Dimensions Drawings

Compact and Modular Smart Relays

Mounting on 35 mm/1.38 in. DIN Rail

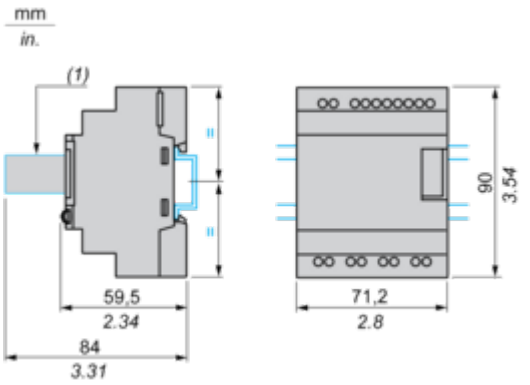

(1) With SR2USB01 or SR2BTC01

Screw Fixing (Retractable Lugs)

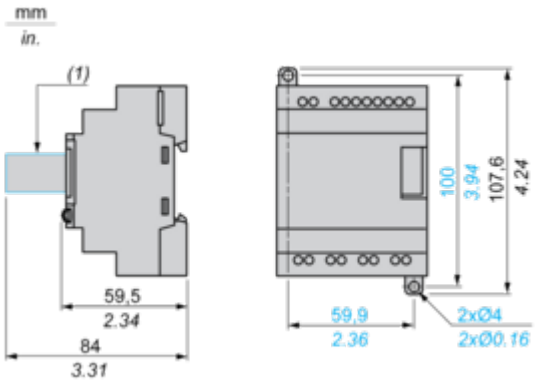

(1) With SR2USB01 or SR2BTC01

Position of Display

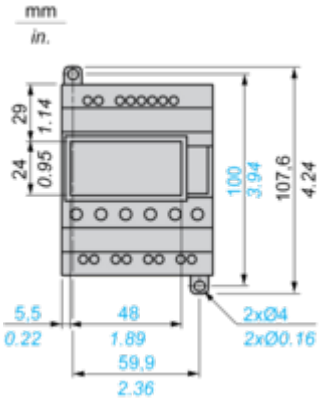

Connections and Schema

Compact and Modular Smart Relays

Connection of Smart Relays on DC Supply

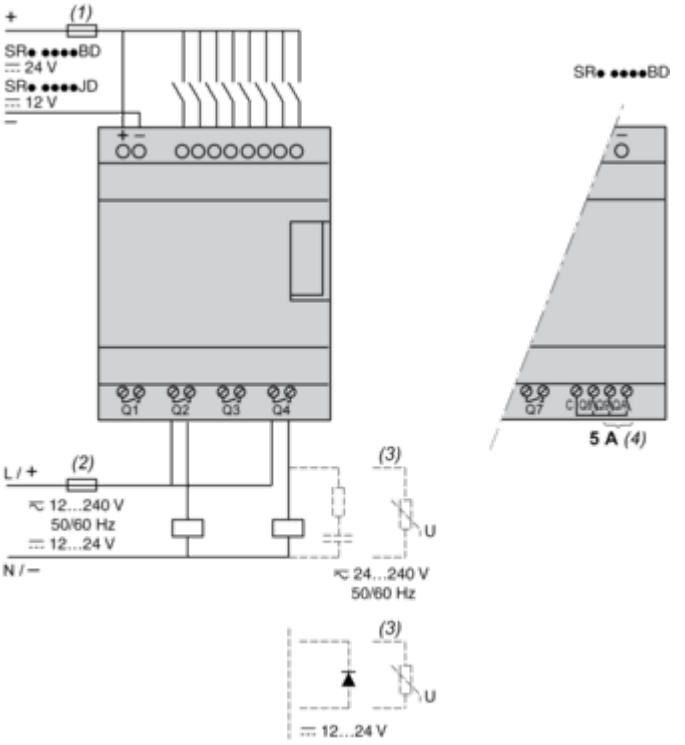

(1) 1 A quick-blow fuse or circuit-breaker.
(2) Fuse or circuit-breaker.
(3) Inductive load.
(4) Q9 and QA: 5 A (max. current in terminal C: 10 A).

Discrete Input Used for 3-Wire Sensors

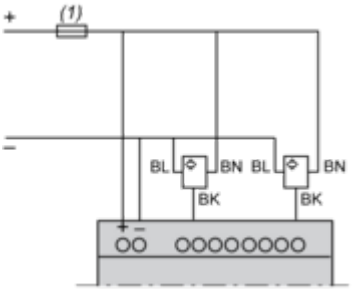

(1) 1 A quick-blow fuse or circuit-breaker.

Performance Curves

Compact and Modular Smart Relays

Electrical Durability of Relay Outputs

(in millions of operating cycles, conforming to IEC/EN 60947-5-1)
DC-12 (1)

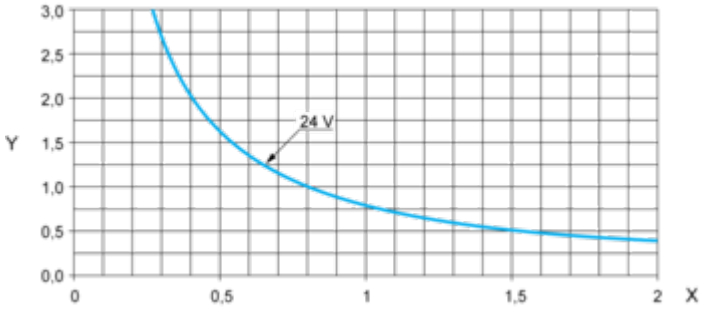

X: Current (A)
Y: Millions of operating cycles
(1) DC-12: control of resistive loads and of solid state loads isolated by opto-coupler, L/R ≤ 1 ms.

DC-13 (1)

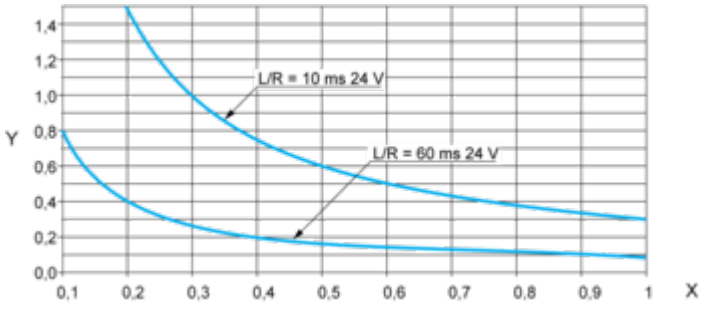

X: Current (A)
Y: Millions of operating cycles
(1) DC-13: switching electromagnets, L/R ≤ 2 x (Ue x Ie) in ms, Ue: rated operational voltage, Ie: rated operational current (with a protection diode on the load, DC-12 curves must be used with a coefficient of 0.9 applied to the number in millions of operating cycles).