Product data sheet

Specifications

discrete I/O module, Modicon TM3, 8 IO, 4 inputs, 4 relay outputs, screw, 24V DC

TM3DM8R

Main

Range Of Product	Modicon TM3
Product Or Component Type	Discrete I/O module
Range Compatibility	Modicon M241 Modicon M251 Modicon M221 Modicon M262
Discrete Input Number	4 input IEC 61131-2 Type 1
Discrete Input Logic	Sink or source (positive/negative)
Discrete Input Voltage	24 V
Discrete Input Current	7 mA input
Discrete Output Type	Relay normally open
Discrete Output Number	4
Discrete Output Logic	Positive or negative
Discrete Output Voltage	24 V DC relay output 240 V AC relay output
Discrete Output Current	2000 mA relay output

Complementary

Discrete I/O Number	8
Current Consumption	5 mA 5 V DC via bus connector at state off) 0 mA 24 V DC via bus connector at state on) 0 mA 24 V DC via bus connector at state off) 25 mA 5 V DC via bus connector at state on)
Discrete Input Voltage Type	DC
Voltage State 1 Guaranteed	15...28.8 V input
Current State 1 Guaranteed	>= 2.5 mA input)
Voltage State 0 Guaranteed	0...5 V input
Current State 0 Guaranteed	<= 1 mA input)
Input Impedance	3.4 kOhm
Response Time	4 ms turn-on) 4 ms turn-off)
Maximum Current Per Output Common	7 A
Mechanical Durability	20000000 cycles
Minimum Load	10 mA 5 V DC relay output
Local Signalling	I/O state 1 LED per channel green)

Disclaimer: This documentation is not intended as a substitute for and is not to be used for determining suitability or reliability of these products for specific user applications

Electrical Connection	11 x 2.5 mm² removable screw terminal block pitch 5.08 mm for inputs and outputs
Maximum Cable Distance Between Devices	Unshielded cable <98.43 ft (30 m) regular input
Insulation	Between input and internal logic 500 V AC Non-insulated between inputs Between input groups and output groups 1500 V AC Between open contact 750 V AC Between output and internal logic 500 V AC Non-insulated between outputs
Marking	CE
Mounting Support	Top hat type TH35-15 rail IEC 60715 Top hat type TH35-7.5 rail IEC 60715 plate or panel with fixing kit
Height	3.54 in (90 mm)
Depth	3.33 in (84.6 mm)
Width	1.08 in (27.4 mm)
Net Weight	2.09 lb(US) (0.95 kg)

Environment

Standards	IEC 61131-2
Product Certifications	cULus CE UKCA RCM EAC cULus HazLoc
Resistance To Electrostatic Discharge	8 kV in air IEC 61000-4-2 4 kV on contact IEC 61000-4-2
Resistance To Electromagnetic Fields	9.14 V/yd (10 V/m) 80 MHz...1 GHz IEC 61000-4-3 2.74 V/yd (3 V/m) 1.4 GHz...2 GHz IEC 61000-4-3 0.91 V/yd (1 V/m) 2 GHz...3 GHz IEC 61000-4-3
Resistance To Magnetic Fields	98.43 A/ft (30 A/m) 50/60 Hz IEC 61000-4-8
Resistance To Fast Transients	1 kV I/OIEC 61000-4-4 2 kV relay outputIEC 61000-4-4
Surge Withstand	2 kV output common mode IEC 61000-4-5 1 kV input common mode IEC 61000-4-5
Resistance To Conducted Disturbances	10 V 0.15...80 MHz IEC 61000-4-6 3 V spot frequency (2, 3, 4, 6.2, 8.2, 12.6, 16.5, 18.8, 22, 25 MHz) Marine specification (LR, ABS, DNV, GL)
Electromagnetic Emission	Radiated emissions 40 dBµV/m QP class A 10 m)30…230 MHz IEC 55011 Radiated emissions 47 dBµV/m QP class A 10 m)230…1000 MHz IEC 55011
Ambient Air Temperature For Operation	14…95 °F (-10…35 °C) vertical installation 14…131 °F (-10…55 °C) horizontal installation
Ambient Air Temperature For Storage	-13…158 °F (-25…70 °C)
Relative Humidity	10…95 %, without condensation in operation) 10…95 %, without condensation in storage)
Ip Degree Of Protection	IP20 with protective cover in place
Pollution Degree	2
Operating Altitude	0...2000 m
Storage Altitude	0.00…9842.52 ft (0…3000 m)
Vibration Resistance	3.5 mm 5…8.4 Hz DIN rail 3 gn 8.4…150 Hz DIN rail 3.5 mm 5…8.4 Hz panel 3 gn 8.4…150 Hz panel

Shock Resistance	15 gn 11 ms

Packing Units

Unit Type Of Package 1	PCE
Number Of Units In Package 1	1
Package 1 Height	2.95 in (7.5 cm)
Package 1 Width	4.92 in (12.5 cm)
Package 1 Length	4.13 in (10.5 cm)
Package 1 Weight	8.11 oz (230.0 g)
Unit Type Of Package 2	S04
Number Of Units In Package 2	42
Package 2 Height	11.81 in (30 cm)
Package 2 Width	15.75 in (40 cm)
Package 2 Length	23.62 in (60 cm)
Package 2 Weight	23.46 lb(US) (10.643 kg)
Unit Type Of Package 3	P12
Number Of Units In Package 3	504
Package 3 Height	41.34 in (105 cm)
Package 3 Width	47.24 in (120 cm)
Package 3 Length	31.50 in (80 cm)
Package 3 Weight	304.24 lb(US) (138 kg)

Sustainability

Green Premium™ label is Schneider Electric's commitment to delivering products with best-in-class environmental performance. Green Premium promises compliance with the latest regulations, transparency on environmental impacts, as well as circular and low-CO_2 products.

Guide to assessing product sustainability is a white paper that clarifies global eco-label standards and how to interpret environmental declarations.

Learn more about Green Premium >

Guide to assess a product's sustainability >

Transparency RoHS/REACh

Well-being performance

Reach Free Of Svhc	
Toxic Heavy Metal Free	
Mercury Free	
Rohs Exemption Information	Yes
Pvc Free	

Certifications & Standards

Reach Regulation	REACh Declaration
Eu Rohs Directive	Pro-active compliance (Product out of EU RoHS legal scope) EU RoHS Declaration
China Rohs Regulation	China RoHS declaration
Environmental Disclosure	Product Environmental Profile
Weee	The product must be disposed on European Union markets following specific waste collection and never end up in rubbish bins
Circularity Profile	End of Life Information

Dimensions Drawings

Dimensions

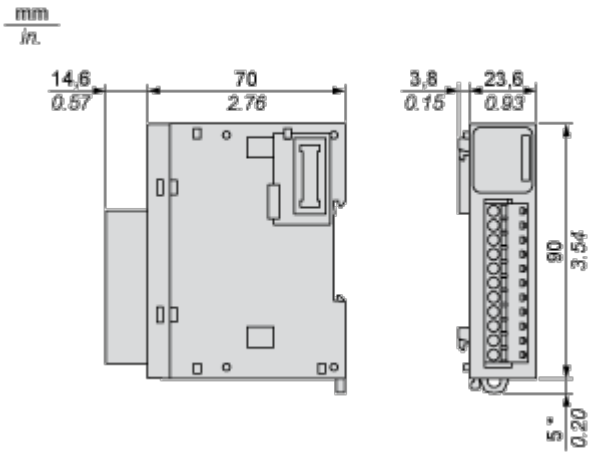

(*) 8.5 mm/0.33 in. when the clamp is pulled out.

Mounting and Clearance

Spacing Requirements

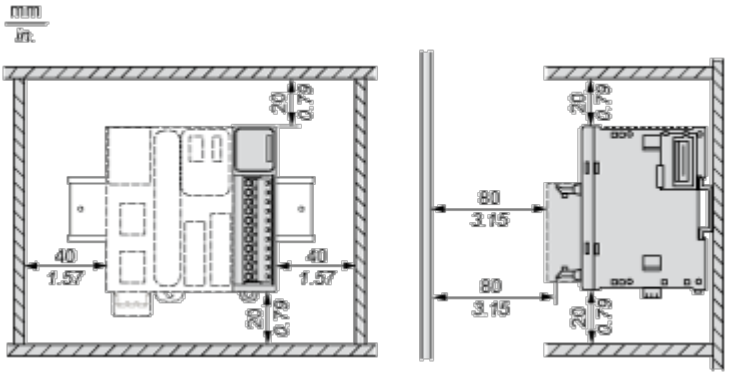

Mounting on a Rail

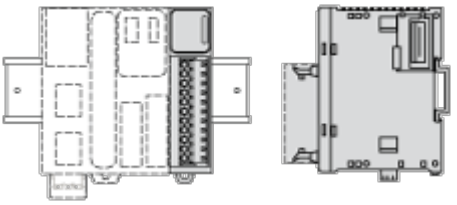

Incorrect Mounting

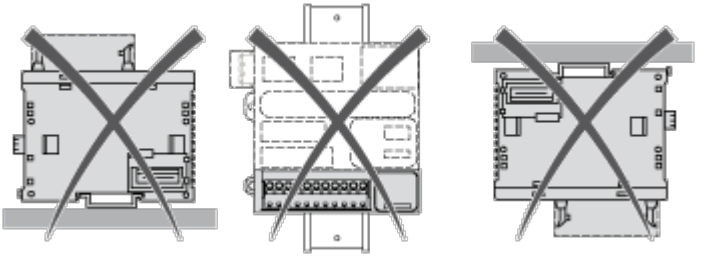

Mounting on a Panel Surface

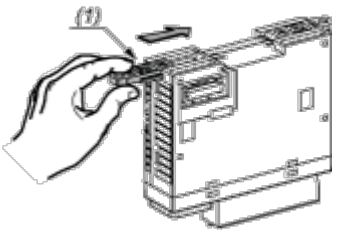

(1) Install a mounting strip

Mounting Hole Layout

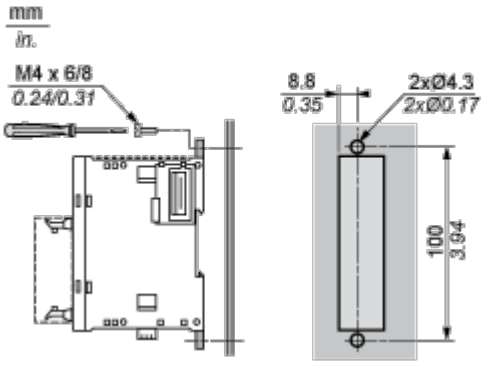

Connections and Schema

Digital Mixed I/O Module (8-channel)

Wiring Diagram (Sink / Source)

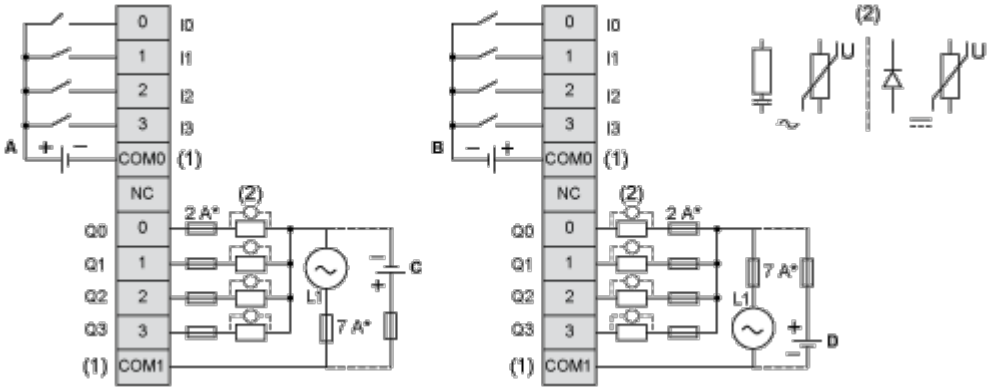

(*) Type T fuse

(1) The COM0 and COM1 terminals are **not** connected internally.

(2) To improve the life time of the contacts, and to protect from potential inductive load damage, it is recommended to connect a free wheeling diode in parallel to each inductive DC load or an RC snubber in parallel of each inductive AC load.

(A) Sink wiring (positive logic)

(B) Source wiring (negative logic)

(C) Source wiring (positive logic)

(D) Sink wiring (negative logic)