Product data sheet

Specifications

CANopen interface I/O block, Modicon TM7, IP67, 16 M12

TM7NCOM16A

Main

Range Of Product	Modicon TM7
Product Or Component Type	CANopen interface I/O block
Range Compatibility	Modicon LMC058 Modicon M258
Enclosure Material	Plastic
Bus Type	CANopen
[Ue] Rated Operational Voltage	24 V DC
Input/Output Number	16
Input/Output Number Of Block	16 I/O

Complementary

Discrete Input Number	0…16 configurable by software
Discrete Input Voltage	24 V
Discrete Input Voltage Type	DC
Discrete Input Current	4.4 mA
Discrete Input Logic	Positive
Discrete Output Number	0…16 configurable by software
Discrete Output Voltage	24 V
Discrete Output Voltage Type	DC
Discrete Output Current	<= 0.5 A
Discrete Output Type	Transistor
Sensor Power Supply	24 V, 500 mA for all channels overload, short-circuit and reverse polarity protection
Electrical Connection	1 male connector M12 - A coding - 5 ways CANopen bus IN 1 female connector M12 - B coding - 4 ways TM7 bus OUT 1 male connector M8 - 4 ways power IN 1 female connector M8 - 4 ways power OUT 1 female connector M12 - A coding - 5 ways CANopen bus OUT 8 female connectors M12 - A coding - 5 ways sensor or actuator
Local Signalling	Bus diagnostic 2 LEDs Actuator power supply diagnostics 1 LED Sensor power supply diagnostics 1 LED
Operating Position	Any position
Fixing Mode	By 2 screws
Net Weight	0.71 lb(US) (0.32 kg)

Disclaimer: This documentation is not intended as a substitute for and is not to be used for determining suitability or reliability of these products for specific user applications

Environment

Standards	IEC 61131-2
Product Certifications	ATEX II 3g EEx nA II T5 C-Tick cURus GOST-R
Marking	CE
Ambient Air Temperature For Operation	14…140 °F (-10…60 °C)
Ambient Air Temperature For Storage	-13…185 °F (-25…85 °C)
Relative Humidity	5…95 % without condensation or dripping water
Pollution Degree	2 IEC 60664
Ip Degree Of Protection	IP67 IEC 61131-2
Operating Altitude	0...2000 m
Storage Altitude	0.00…9842.52 ft (0…3000 m)
Vibration Resistance	7.5 mm constant amplitude 2…8 Hz)IEC 60721-3-5 Class 5M3 2 gn constant acceleration 8…200 Hz)IEC 60721-3-5 Class 5M3 4 gn constant acceleration 200…500 Hz)IEC 60721-3-5 Class 5M3
Shock Resistance	30 gn 11 ms IEC 60721-3-5 Class 5M3
Resistance To Electrostatic Discharge	6 kV in contact IEC 61000-4-2 8 kV in air IEC 61000-4-2
Resistance To Electromagnetic Fields	9.14 V/yd (10 V/m) 0.08…2 Hz IEC 61000-4-3 0.91 V/yd (1 V/m) 2…2.7 Hz IEC 61000-4-3
Resistance To Fast Transients	2 kV IEC 61000-4-4 power supply) 1 kV IEC 61000-4-4 input/output) 1 kV IEC 61000-4-4 shielded cable)
Surge Withstand For Dc 24 V Circuit	1 kV power supply (common mode) IEC 61000-4-5 0.5 kV power supply (differential mode) IEC 61000-4-5 1 kV unshielded links (common mode) IEC 61000-4-5 0.5 kV unshielded links (differential mode) IEC 61000-4-5 1 kV shielded links (common mode) IEC 61000-4-5 0.5 kV shielded links (differential mode) IEC 61000-4-5
Electromagnetic Compatibility	EN/IEC 61000-4-6
Disturbance Radiated/Conducted	CISPR 11

Packing Units

Unit Type Of Package 1	PCE
Number Of Units In Package 1	1
Package 1 Height	1.77 in (4.500 cm)
Package 1 Width	2.17 in (5.500 cm)
Package 1 Length	6.97 in (17.700 cm)
Package 1 Weight	14.04 oz (398.000 g)
Unit Type Of Package 2	S02
Number Of Units In Package 2	24
Package 2 Height	5.91 in (15.000 cm)
Package 2 Width	11.81 in (30.000 cm)
Package 2 Length	15.75 in (40.000 cm)
Package 2 Weight	21.78 lb(US) (9.877 kg)

Contractual warranty

Warranty	18 months

Sustainability

Green Premium™ label is Schneider Electric's commitment to delivering products with best-in-class environmental performance. Green Premium promises compliance with the latest regulations, transparency on environmental impacts, as well as circular and low-CO_2 products.

Guide to assessing product sustainability is a white paper that clarifies global eco-label standards and how to interpret environmental declarations.

Learn more about Green Premium >

Guide to assess a product's sustainability >

Transparency RoHS/REACh

Well-being performance

Toxic Heavy Metal Free	
Mercury Free	
Rohs Exemption Information	Yes
Pvc Free	

Certifications & Standards

Reach Regulation	REACh Declaration
Eu Rohs Directive	Pro-active compliance (Product out of EU RoHS legal scope)
China Rohs Regulation	China RoHS declaration
Environmental Disclosure	Product Environmental Profile
Weee	The product must be disposed on European Union markets following specific waste collection and never end up in rubbish bins
Circularity Profile	End of Life Information

Presentation

TM7 CANopen Interface I/O Block

Description

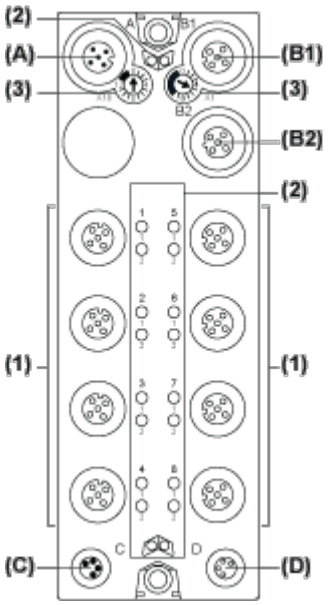

(A) CANopen bus IN connector

(B1) CANopen bus OUT connector

(B2) TM7 bus OUT connector

(C) 24 Vdc power IN connector

(D) 24 Vdc power OUT connector

(1) Input / Output connectors

(2) Status and channel LEDs

(3) CANopen Address settings rotary switches

Connector and Channel Assignments

I/O connectors	Channel types	Channels
1	Input/Output	I0/Q0
2	Input/Output	I1/Q1
3	Input/Output	I2/Q2
4	Input/Output	I3/Q3
5	Input/Output	I4/Q4
6	Input/Output	I5/Q5
7	Input/Output	I6/Q6
8	Input/Output	I7/Q7
9	Input/Output	I8/Q8

I/O connectors	Channel types	Channels
10	Input/Output	I9/Q9
11	Input/Output	I10/Q10
12	Input/Output	I11/Q11
13	Input/Output	I12/Q12
14	Input/Output	I13/Q13
15	Input/Output	I14/Q14
16	Input/Output	I15/Q15

Dimensions Drawings

TM7 Block, Size 2

Dimensions

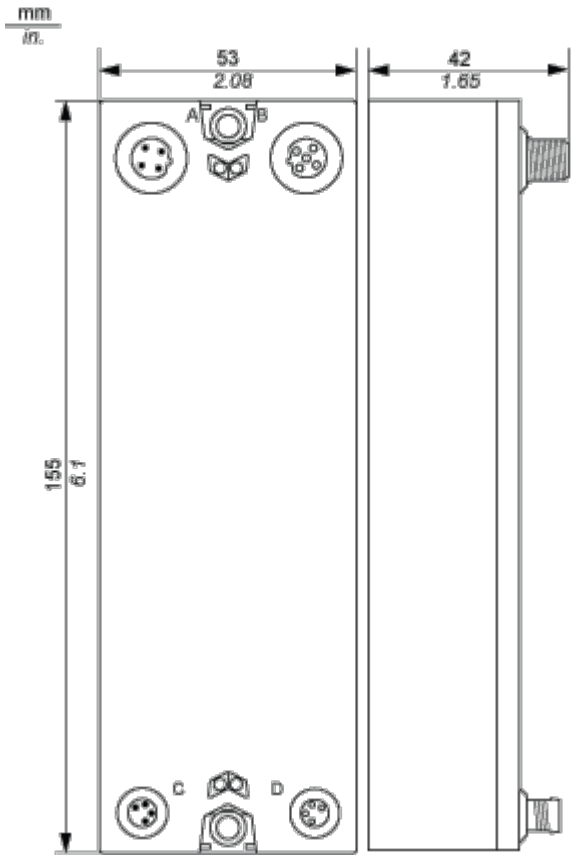

Mounting and Clearance

Spacing Requirements

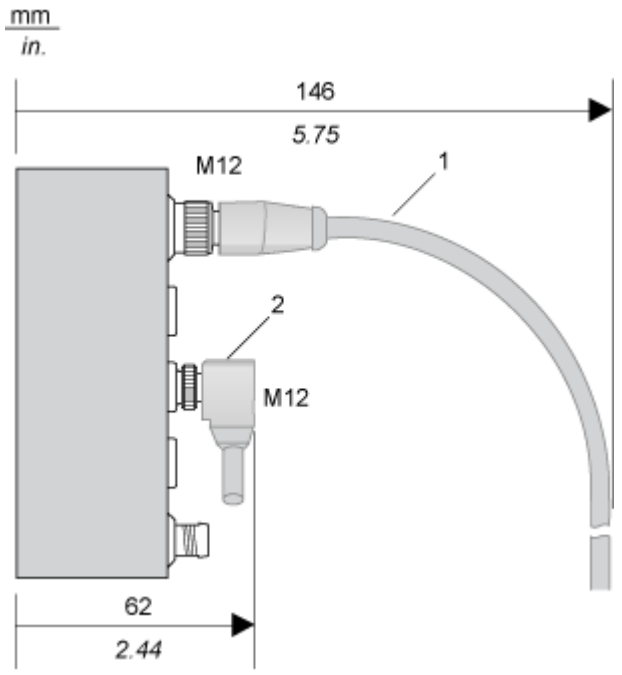

1 Straight cable

2 Elbowed cable

Installation Guidelines

TM7 Block on an Aluminium Frame

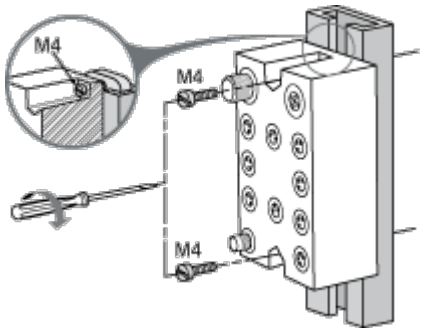

NOTE: Maximum torque to fasten the required M4 screws is 0.6 N.m (5.3 lbf-in).

TM7 Block on a DIN Rail

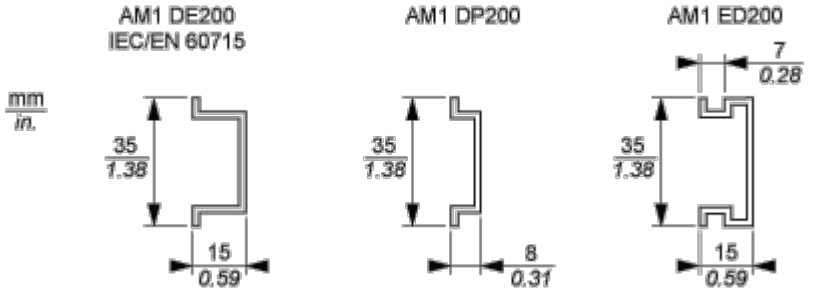

NOTE: Only size 1 (smallest) blocks can be installed on DIN rail with the TM7ACMP mounting plate.

TM7 Block Directly on the Machine

Drilling template of the block:

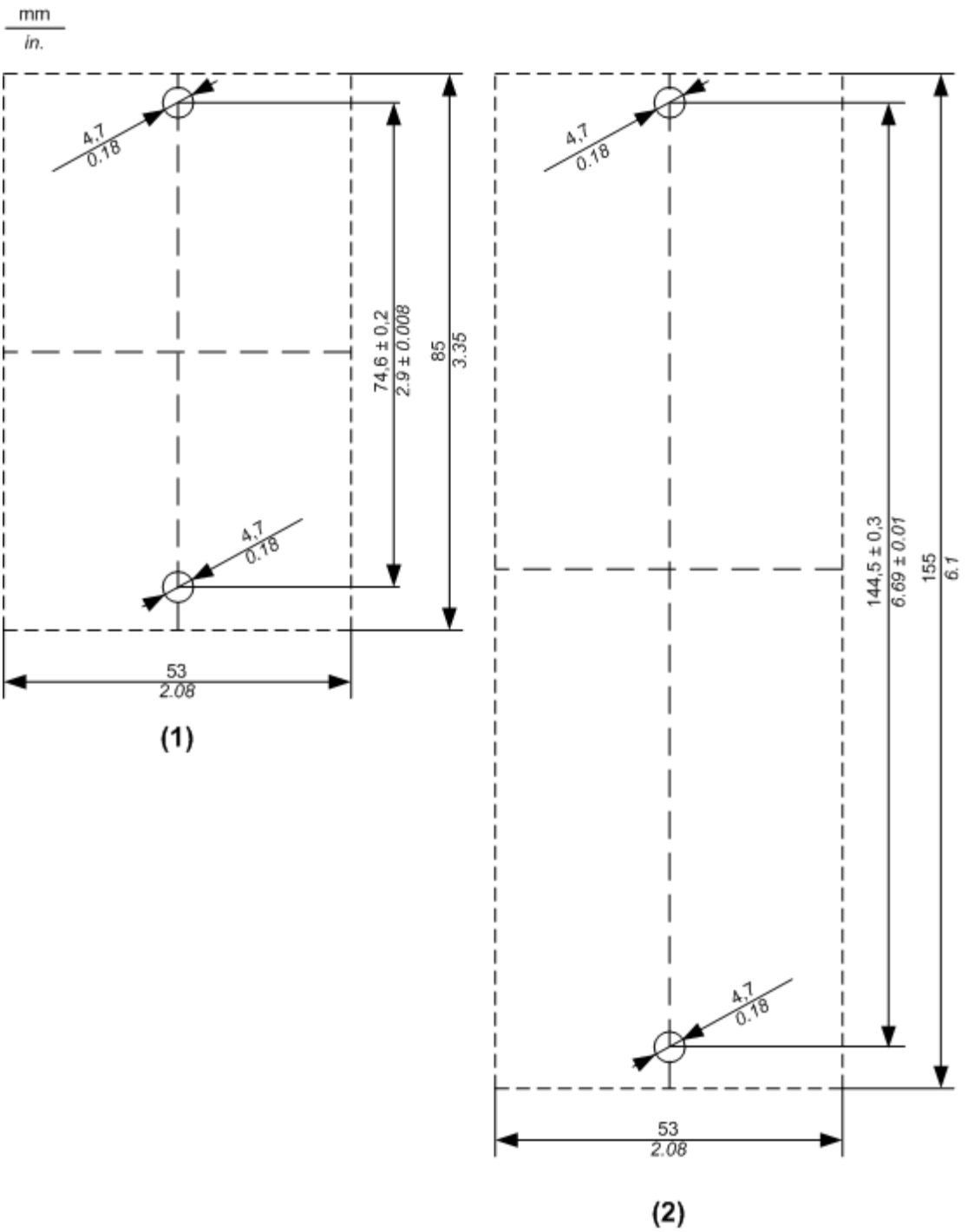

(1) Size 1

(2) Size 2

The thickness of the base plate should be taken into consideration when defining the screw length.

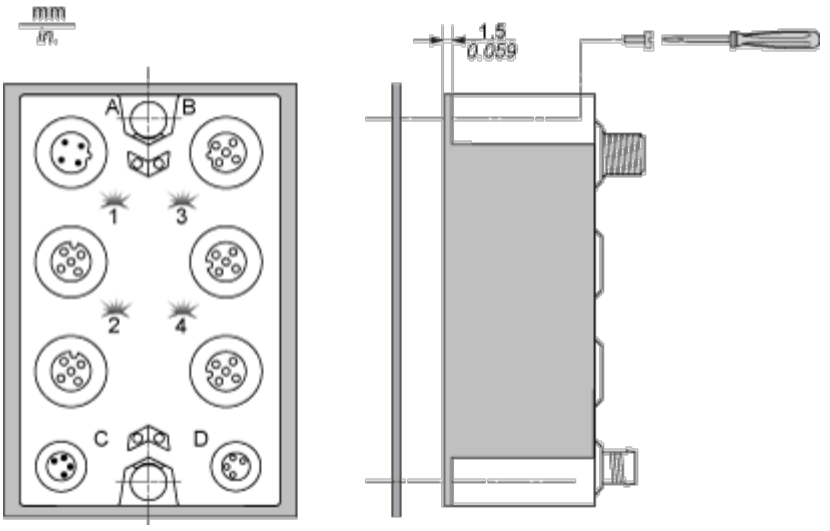

NOTE: Maximum torque to fasten the required M4 screws is 0.6 N.m (5.3 lbf-in).

Connections and Schema

Wiring Diagram

Pin Assignments for I/O Connectors

Connection	Pin	Designation
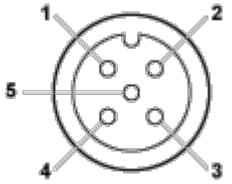	1	24 Vdc sensor supply
	2	DI: input signal channel 1
	3	0 Vdc
	4	DI: input signal channel 2
	5	N.C.

CANopen Pins and Connectors

Connector Assignments

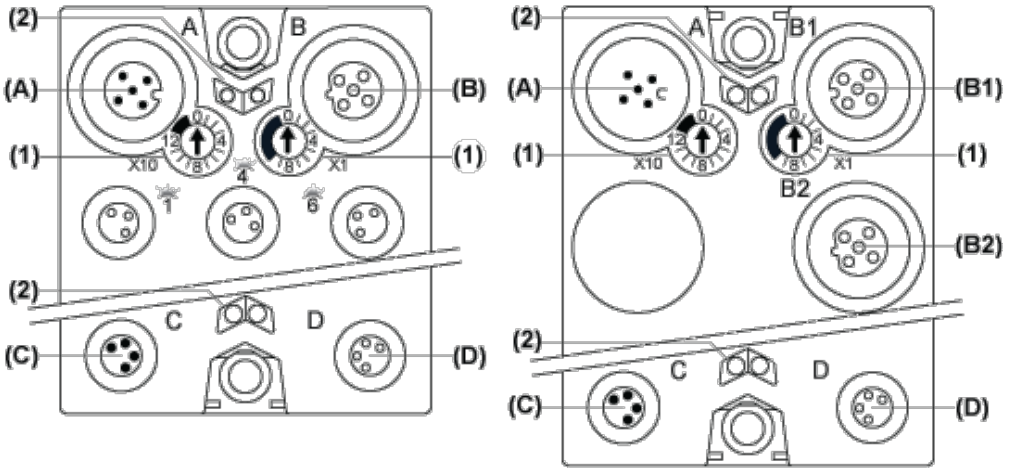

(A) Field bus IN connector

(B) and (B2) TM7 bus OUT connector M12

(B1) CANopen bus OUT connector M12

(C) 24 Vdc power IN connector

(D) 24 Vdc power OUT connector

(1) Address settings rotary switches

(2) Status LEDs

Pin Assignments

Connectors	Pin	Designation
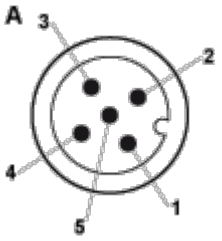	1	CAN_SHLD
	2	(CAN_V+)
	3	CAN_GND
	4	CAN_H
	5	CAN_L
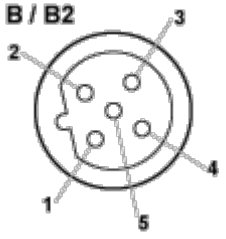	1	TM7 V+
	2	TM7 Bus Data
	3	TM7 0V
	4	TM7 Bus Data
	5	N.C.
	1	CAN_SHLD

Connectors	Pin	Designation
	2	(CAN_V+)
	3	CAN_GND
	4	CAN_H
	5	CAN_L

Connectors	Pin	Designation
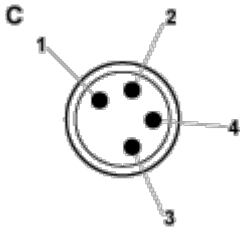	1	24 Vdc main power
	2	24 Vdc I/O power segment
	3	0 Vdc
	4	0 Vdc
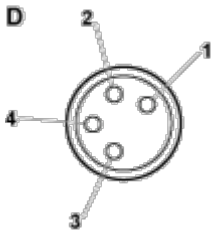	1	24 Vdc I/O power segment
	2	24 Vdc I/O power segment
	3	0 Vdc
	4	0 Vdc

Wiring the Power Supply

Connections	2 Power Supplies
24 Vdc main power that generates power for TM7 power bus	PS1
24 Vdc I/O power segment	PS2

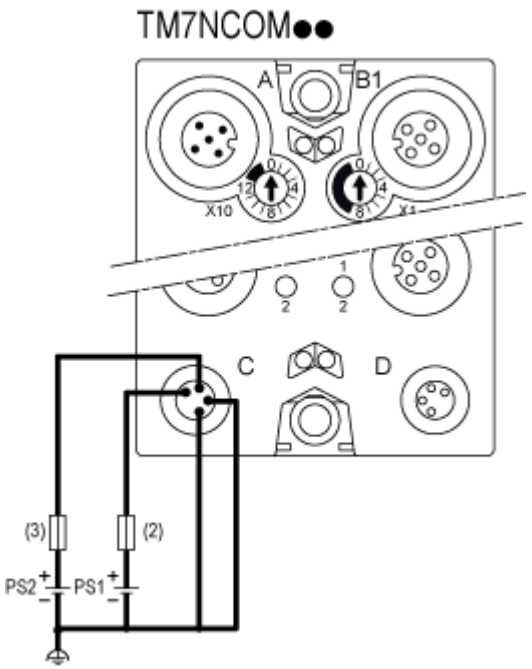

(2) External fuse, Type T slow-blow, 1 A, 250 V [1]

(3) External fuse, Type T slow-blow, 4 A max., 250 V

PS1 External isolated main power supply, 24 Vdc

PS2 External isolated I/O power supply, 24 Vdc

[1] Fuse limited to 1 A per PDB, maximum fuse limited to 5 A with maximum 4 PDB interconnected. If less then 4 PDBs size the fuse in accordance with the number of PDBs.

Performance Curves

Switching Inductive Load Characteristics

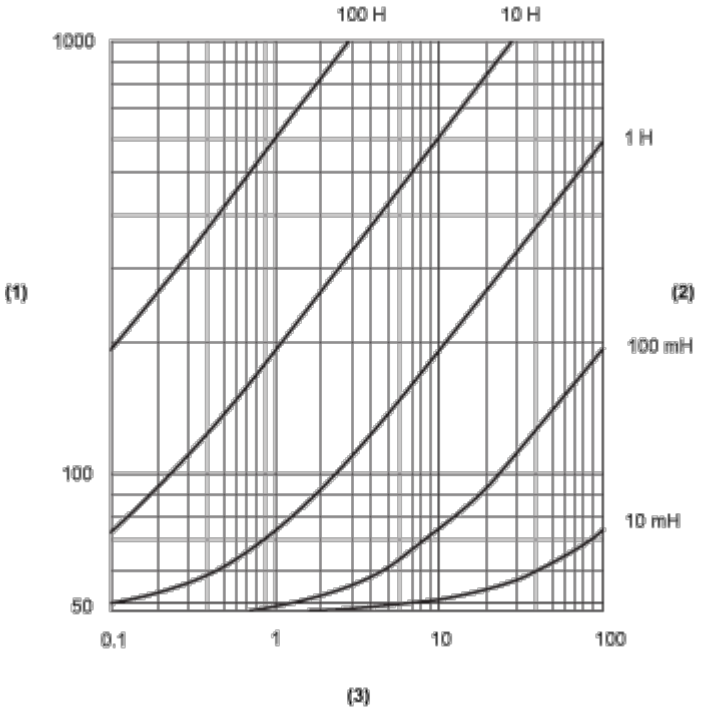

(1) Load resistance in Ω

(2) Load inductance in H

(3) Max. operating cycles / second