Product data sheet

Specifications

Green Premium™

Antimicrobial Illuminated emergency stop, Harmony XB5, plastic, 22mm, trigger latching turn to release, white red LED, 24V AC DC, 1 NO + 1 NC

XB5AS84W3B5

Main

Range Of Product	Harmony XB5
Product Or Component Type	Emergency stop push-button Emergency switching off push-button
Device Short Name	XB5
Bezel Material	Plastic
Fixing Collar Material	Plastic
Head Type	Standard
Mounting Diameter	0.87 in (22 mm)
Sale Per Indivisible Quantity	1
Local Signalling	Red LED / white LED 24 V AC/DC
Light Source	Protected LED
[Us] Rated Supply Voltage	24 V
Light Source Colour	White Red
Shape Of Signaling Unit Head	Round
Type Of Operator	trigger action and mechanical latching
Reset	Turn to release
Operator Profile	Red square 32 mm, IEC
Contact Operation	Slow-break
Connections - Terminals	Screw-clamp terminals, <= 2 x 1.5 mm² with or without cable end IEC 60947-1 Screw-clamp terminals, >= 1 x 0.22 mm² with or without cable end IEC 60947-1
Device Presentation	Complete product

Complementary

[Us] Rated Supply Voltage	24 V AC/DC 50/60 Hz
Height	2.36 in (60 mm)
Width	2.36 in (60 mm)
Depth	3.35 in (85 mm)
Terminals Description Iso N°1	(1-2)NC (3-4)NO
Net Weight	0.24 lb(US) (0.107 kg)
Electrical Insulation Class	Class II IEC 61140

Disclaimer: This documentation is not intended as a substitute for and is not to be used for determining suitability or reliability of these products for specific user applications

Resistance To High Pressure Washer	1015.26 psi (7000000 Pa) 131 °F (55 °C) 0.1 m
Device Mounting	Fixing hole 0.89 in (22.5 mm) +/- 0.2 mm Fixing hole 0.35 in (9 mm) +/- 0.5 mm
Fixing Mode	Fixing nut +/- 0.2)
Contacts Usage	Standard
Positive Opening	With NC contact IEC 60947-5-1 appendix K
Operating Travel	0.06 in (1.5 mm) NC changing electrical state) 0.17 in (4.3 mm) total travel)
Mechanical Durability	300000 cycles
Tightening Torque	7.08…10.62 lbf.in (0.8…1.2 N.m) IEC 60947-1
Shape Of Screw Head	Cross Philips no 1 Cross pozidriv No 1 Slotted flat Ø 4 mm Slotted flat Ø 5.5 mm
Contacts Material	Silver alloy (Ag/Ni)
Short-Circuit Protection	10 A cartridge fuse gG IEC 60947-5-1
[Ith] Conventional Free Air Thermal Current	10 A IEC 60947-5-1
[Ui] Rated Insulation Voltage	600 V 3)IEC 60947-1
Resistance To Electrostatic Discharge	4 kV on contact (on metal parts) IEC 61000-4-2 8 kV in free air (in insulating parts) IEC 61000-4-2
[Uimp] Rated Impulse Withstand Voltage	6 kV IEC 60947-1
[Ie] Rated Operational Current	3 A 240 V, AC-15, A600 IEC 60947-5-1 6 A 120 V, AC-15, A600 IEC 60947-5-1 0.1 A 600 V, DC-13, Q600 IEC 60947-5-1 0.27 A 250 V, DC-13, Q600 IEC 60947-5-1 0.55 A 125 V, DC-13, Q600 IEC 60947-5-1 1.2 A 600 V, AC-15, A600 IEC 60947-5-1
Electrical Durability	1000000 cycles, AC-15, 2 A 230 V 3600 cyc/h 0.5 IEC 60947-5-1 appendix C 1000000 cycles, AC-15, 3 A 120 V 3600 cyc/h 0.5 IEC 60947-5-1 appendix C 1000000 cycles, AC-15, 4 A 24 V 3600 cyc/h 0.5 IEC 60947-5-1 appendix C 1000000 cycles, DC-13, 0.2 A 110 V 3600 cyc/h 0.5 IEC 60947-5-1 appendix C 1000000 cycles, DC-13, 0.5 A 24 V 3600 cyc/h 0.5 IEC 60947-5-1 appendix C
Electrical Reliability	Λ < 10exp(-6) 5 V, 1 mA in clean environment IEC 60947-5-4 Λ < 10exp(-8) 17 V, 5 mA in clean environment IEC 60947-5-4

Environment

Protective Treatment	TH
Ambient Air Temperature For Storage	-40…158 °F (-40…70 °C)
Ambient Air Temperature For Operation	-40…158 °F (-40…70 °C)
Ip Degree Of Protection	IP66 IEC 60529 IP67 IEC 60529 IP69 IEC 60529 IP69K ISO 20653 Type 13 UL 50E Type 12 UL 50E Type 4 UL 50E Type 4X UL 50E
Ik Degree Of Protection	IK05 conforming to IEC 50102

Standards	IEC 60947-5-1 IEC 60947-5-4 UL 508 ISO 21702 ISO 22196:2011 UL 60947-5-5 IEC 60947-5-5 NISD
Product Certifications	UL listed CSA EAC CCC
Vibration Resistance	5 gn 10…500 Hz)IEC 60068-2-6 25 mm peak to peak 2…10 Hz)IEC 60068-2-6
Shock Resistance	30 gn 18 ms) half sine wave acceleration IEC 60068-2-27 50 gn 11 ms) half sine wave acceleration IEC 60068-2-27 25 gn 6 ms) 1000 shocks on each axis IEC 60068-2-27

Packing Units

Unit Type Of Package 1	PCE
Number Of Units In Package 1	1
Package 1 Height	2.76 in (7.0 cm)
Package 1 Width	2.76 in (7.0 cm)
Package 1 Length	3.94 in (10.0 cm)
Package 1 Weight	4.06 oz (115.0 g)
Unit Type Of Package 2	S03
Number Of Units In Package 2	40
Package 2 Height	11.81 in (30.0 cm)
Package 2 Width	11.81 in (30.0 cm)
Package 2 Length	15.75 in (40.0 cm)
Package 2 Weight	11.17 lb(US) (5.067 kg)

Contractual warranty

Warranty	18 months

Sustainability

Green Premium™ label is Schneider Electric's commitment to delivering products with best-in-class environmental performance. Green Premium promises compliance with the latest regulations, transparency on environmental impacts, as well as circular and low-CO_2 products.

Guide to assessing product sustainability is a white paper that clarifies global eco-label standards and how to interpret environmental declarations.

Learn more about Green Premium >

Guide to assess a product's sustainability >

RoHS/REACh

Well-being performance

Reach Free Of Svhc	
Toxic Heavy Metal Free	
Mercury Free	
Rohs Exemption Information	Yes

Certifications & Standards

Reach Regulation	REACh Declaration
Eu Rohs Directive	Pro-active compliance (Product out of EU RoHS legal scope) EU RoHS Declaration
China Rohs Regulation	China RoHS declaration
Weee	The product must be disposed on European Union markets following specific waste collection and never end up in rubbish bins

Dimensions Drawings

Dimensions

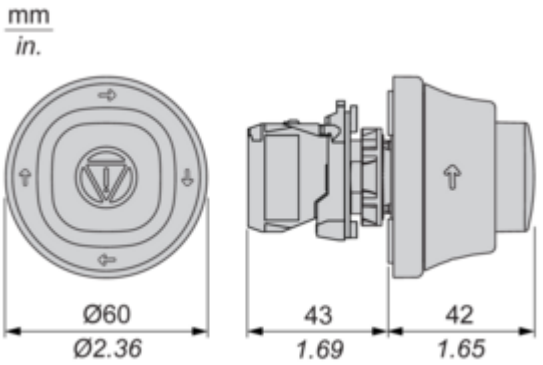

Mounting and Clearance

Mounting and Clearance

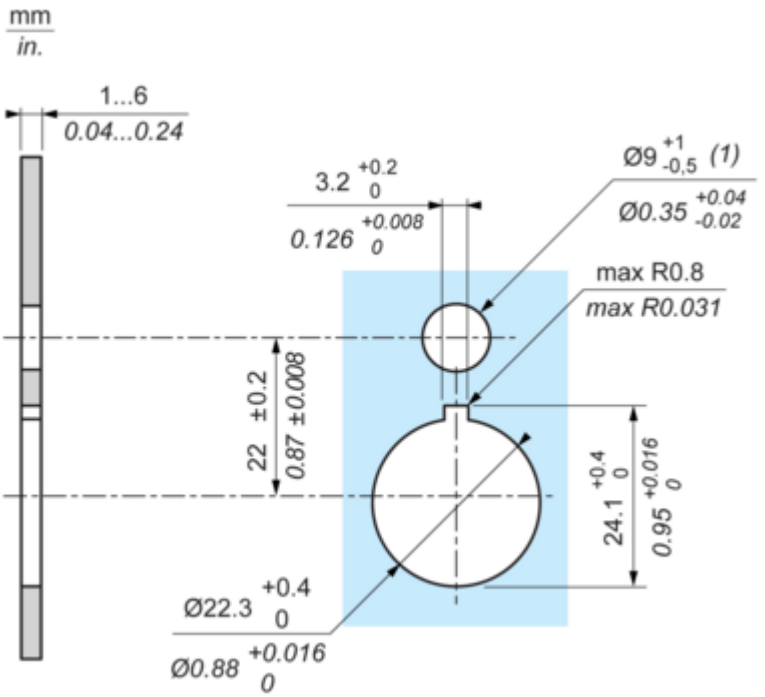

(1) : For IP X9 applications, the max recommendation dimension of hole is Ø9 mm/Ø0.35 in.

Connections and Schema

Wiring Diagram

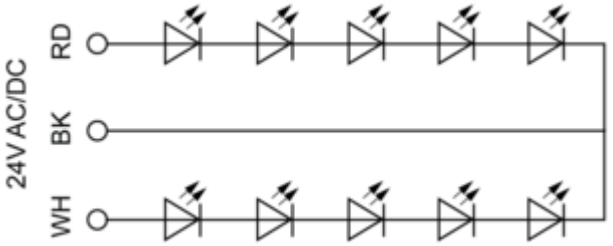

RD : Red
BK : Black
WH : White