# Product data sheet

Specifications

Green Premium™

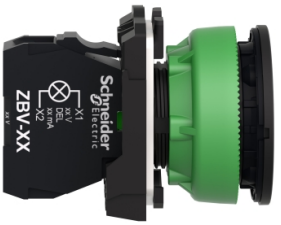


## Pilot light, Harmony XB5, antimicrobial, grey plastic, red flush mounted, 30mm, universal LED, plain lens, 110...120V AC

XB5FVG4

## Main

| | |
|---|---|
| **Range Of Product** | Harmony XB5 |
| **Product Or Component Type** | Pilot light |
| **Device Short Name** | XB5F |
| **Bezel Material** | Dark grey plastic |
| **Fixing Collar Material** | Plastic |
| **Head Type** | Built-in-flush |
| **Mounting Diameter** | 1.20 in (30.5 mm) |
| **Sale Per Indivisible Quantity** | 1 |
| **Shape Of Signaling Unit Head** | Round |
| **Cap/Operator Or Lens Colour** | Red |
| **Operator Additional Information** | With plain lens |
| **Light Source** | Universal LED |
| **Bulb Base** | Integral LED |
| **Light Source Colour** | Red |
| **[Us] Rated Supply Voltage** | 110...120 V AC 50/60 Hz |
| **Device Presentation** | Complete product |

## Complementary

| | |
|---|---|
| **Height** | 1.65 in (42 mm) |
| **Width** | 1.44 in (36.6 mm) |
| **Depth** | 2.17 in (55 mm) |
| **Terminals Description Iso N°1** | (X1-X2)PL |
| **Net Weight** | 0.08 lb(US) (0.038 kg) |
| **Resistance To High Pressure Washer** | 1015.26 psi (7000000 Pa) 131 °F (55 °C) 0.1 m |
| **Connections - Terminals** | Screw clamp terminals, <= 2 x 1.5 mm² with cable end IEC 60947-1<br>Screw clamp terminals, 1 x 0.22...2 x 2.5 mm² without cable end IEC 60947-1 |
| **[Ui] Rated Insulation Voltage** | 250 V 3)IEC 60947-1 |
| **[Uimp] Rated Impulse Withstand Voltage** | 4 kV IEC 60947-1 |
| **Signalling Type** | Steady |
| **Gcr Bridge** | XB5FVCUST01 |
| **Compatibility Code** | XB5 |

Disclaimer: This documentation is not intended as a substitute for and is not to be used for determining suitability or reliability of these products for specific user applications

| | |
|---|---|
| **Supply Voltage Limits** | 100…132 V AC |
| **Current Consumption** | 14 mA |
| **Service Life** | 100000 h at rated voltage and 25 °C |
| **Surge Withstand** | 1 kV IEC 61000-4-5 |

## Environment

| | |
|---|---|
| **Protective Treatment** | TH |
| **Ambient Air Temperature For Storage** | -40…158 °F (-40…70 °C) |
| **Ambient Air Temperature For Operation** | -40…158 °F (-40…70 °C) |
| **Overvoltage Category** | Class II IEC 60536 |
| **Ip Degree Of Protection** | IP66 IEC 60529<br>IP67 IEC 60529<br>IP69 IEC 60529<br>IP69K ISO 20653 |
| **Nema Degree Of Protection** | NEMA 13<br>NEMA 4X |
| **Ik Degree Of Protection** | IK03 conforming to IEC 50102 |
| **Standards** | JIS C8201-5-1<br>CSA C22.2 No 14<br>UL 508<br>IEC 60947-1<br>IEC 60947-5-4<br>IEC 60947-5-1<br>JIS C8201-1<br>ISO 21702<br>ISO 22196:2011 |
| **Product Certifications** | UL listed<br>CSA |
| **Vibration Resistance** | 5 gn 12…500 Hz)IEC 60068-2-6 |
| **Shock Resistance** | 50 gn 18 ms) half sine wave acceleration IEC 60068-2-27<br>30 gn 11 ms) half sine wave acceleration IEC 60068-2-27 |
| **Resistance To Fast Transients** | 2 kV IEC 61000-4-4 |
| **Resistance To Electromagnetic Fields** | 9.14 V/yd (10 V/m) IEC 61000-4-3 |
| **Electromagnetic Compatibility** | Electrostatic discharge - test level: 6 kV (on contact (on metal parts)) conforming to IEC 61000-4-2<br>Electrostatic discharge - test level: 8 kV (in free air (in insulating parts)) conforming to IEC 61000-4-2<br>Electromagnetic emission class B conforming to IEC 55011 |
| **Resistance To Electrostatic Discharge** | 6 kV on contact (on metal parts) IEC 61000-4-2<br>8 kV in free air (in insulating parts) IEC 61000-4-2 |
| **Electromagnetic Emission** | Class B IEC 55011 |

## Packing Units

| | |
|---|---|
| **Unit Type Of Package 1** | PCE |
| **Number Of Units In Package 1** | 1 |
| **Package 1 Height** | 2.20 in (5.59 cm) |
| **Package 1 Width** | 1.80 in (4.57 cm) |
| **Package 1 Length** | 3.50 in (8.89 cm) |
| **Package 1 Weight** | 0.09 lb(US) (0.04 kg) |

## Sustainability

**Green Premium™ label** is Schneider Electric's commitment to delivering products with best-in-class environmental performance. Green Premium promises compliance with the latest regulations, transparency on environmental impacts, as well as circular and low-$CO_2$ products.

**Guide to assessing product sustainability** is a white paper that clarifies global eco-label standards and how to interpret environmental declarations.

Learn more about Green Premium >

Guide to assess a product's sustainability >

RoHS/REACh

## Well-being performance

Mercury Free

| | |
|---|---|
| Rohs Exemption Information | Yes |

## Certifications & Standards

| | |
|---|---|
| **Reach Regulation** | REACh Declaration |
| **Eu Rohs Directive** | Pro-active compliance (Product out of EU RoHS legal scope) |
| **China Rohs Regulation** | China RoHS declaration |
| **Weee** | The product must be disposed on European Union markets following specific waste collection and never end up in rubbish bins |

## Dimensions Drawings

### Dimensions

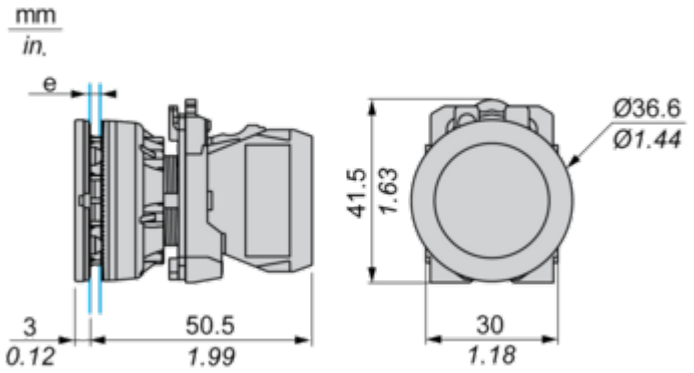


**e:** Clamping thickness: 1 to 6 mm / 0.04 to 0.24 in.

## Mounting and Clearance

### Panel Cut-out for Pushbuttons, Switches and Pilot Lights (Finished Holes, Ready for Installation)

### Connection by Screw Clamp Terminals or Plug-in Connectors

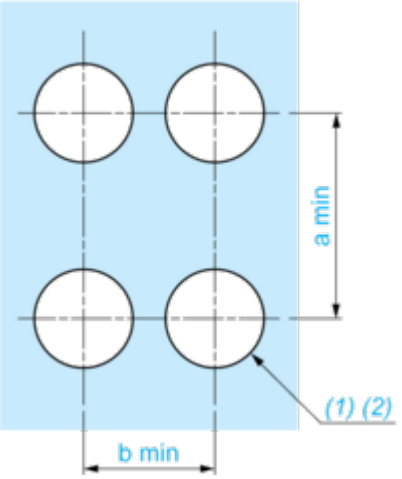


**(1)** Diameter on finished panel or support

**(2)** Ø30.75 mm recommended (Ø30.5 $_{0}^{+0.5}$) / Ø1.21 in. recommended (Ø1.20 in. $_{0}^{+0.0196}$)

| Connections | a in mm | a in in. | b in mm | b in in. |
|---|---|---|---|---|
| By screw clamp terminals or plug-in connector | 40 | 1.57 | 40 | 1.57 |
| By Faston connectors | 45 | 1.77 | 40 | 1.57 |

Technical Description

## Electrical Composition Corresponding to Codes P1, P3, PF1, PR1 and PF2

Light block

## Electrical Composition Corresponding to Code P4

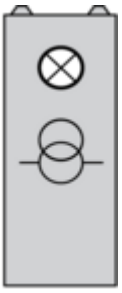

## Legend

Single contact

Double contact

Light block

Possible location