Product data sheet

Specifications

Green Premium™

Wireless and batteryless package, Harmony XB5R, Wireless push button and configurable receiver with 10 colored caps, plastic, 22mm, 24...240V AC DC

XB5RFA02

Main

Range Of Product	Harmony XB5R
Product Or Component Type	Wireless and batteryless package
Device Short Name	XB5R
Head Material	Plastic
Frequency	2405 MHz transmitter 2405 MHz receiver
Emission Class	5M00G7W
Antenna Type	Omnidirectional

Complementary

Control Type	Wireless and batteryless push-button Ø 22 mm assembled on fixing collar
Type Of Receiver	Programmable receiver 2 relays)
[Us] Rated Supply Voltage	24...240 V AC/DC 50/60 Hz
Kit Composition	1 transmitter 1 set of caps 1 receiver 1 fixing collars 1 0.87 in (22 mm) 1 push-button head 0.87 in (22 mm)
Status Led	1 LED green power ON 2 LEDs green relay ON 2 LEDs green function mode 1 LED green and yellow reception signal
Communication Port Protocol	Zigbee IEEE 802.15.4
Max Power Consumption In W	1 mW
Number Of Channels	1
Modulation Technique	O-QPSK
Bandwidth	5 MHz
Antenna Gain	0 dBi
Customizable	No
Compatibility Code	XB5R

Environment

Disclaimer: This documentation is not intended as a substitute for and is not to be used for determining suitability or reliability of these products for specific user applications

Product Certifications	UL CCC GOST CSA C-Tick
Marking	CE
Standards	CSA C22.2 No 14 IEC 60947-5-1 UL 508 IEC 60947-1
Radio Agreement	SRRC RSS ARIB T66 FCC ICASA ANATEL

Packing Units

Unit Type Of Package 1	PCE
Number Of Units In Package 1	1
Package 1 Height	3.66 in (9.300 cm)
Package 1 Width	4.13 in (10.500 cm)
Package 1 Length	4.25 in (10.800 cm)
Package 1 Weight	7.30 oz (207.000 g)
Unit Type Of Package 2	S03
Number Of Units In Package 2	16
Package 2 Height	11.81 in (30.000 cm)
Package 2 Width	11.81 in (30.000 cm)
Package 2 Length	15.75 in (40.000 cm)
Package 2 Weight	8.49 lb(US) (3.850 kg)

Contractual warranty

Warranty	18 months

Sustainability

Green Premium™ label is Schneider Electric's commitment to delivering products with best-in-class environmental performance. Green Premium promises compliance with the latest regulations, transparency on environmental impacts, as well as circular and low-CO_2 products.

Guide to assessing product sustainability is a white paper that clarifies global eco-label standards and how to interpret environmental declarations.

Learn more about Green Premium >

Guide to assess a product's sustainability >

Transparency RoHS/REACh

Well-being performance

Mercury Free

Rohs Exemption Information	Yes

Certifications & Standards

Reach Regulation	REACh Declaration
Eu Rohs Directive	Pro-active compliance (Product out of EU RoHS legal scope)
China Rohs Regulation	China RoHS declaration
Environmental Disclosure	Product Environmental Profile
Weee	The product must be disposed on European Union markets following specific waste collection and never end up in rubbish bins
Circularity Profile	End of Life Information

Dimensions Drawings

Programmable Receiver

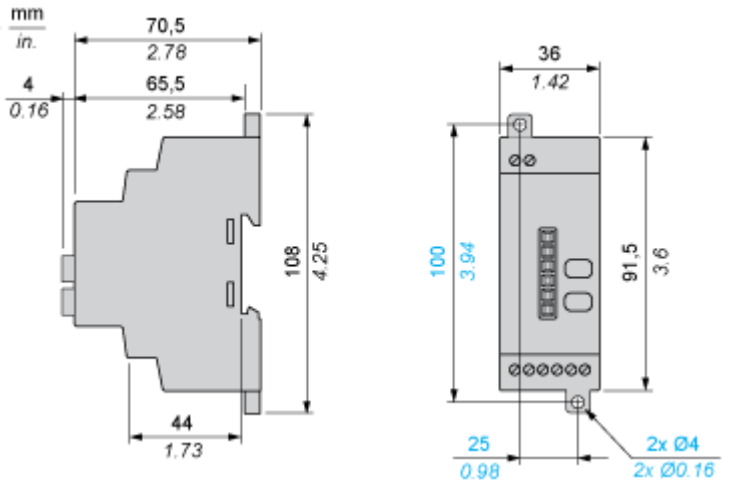

Wireless and Batteryless Pushbutton - Transmitter

With Plastic Pushbutton without Cap

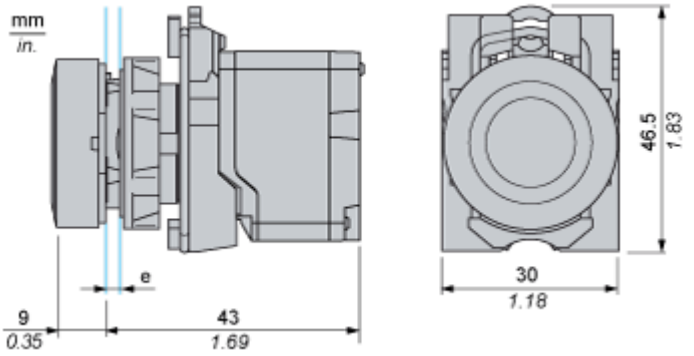

e: panel thickness 1 to 6 mm / 0.039 to 0.24 in.

Mounting and Clearance

Receiver Clearance

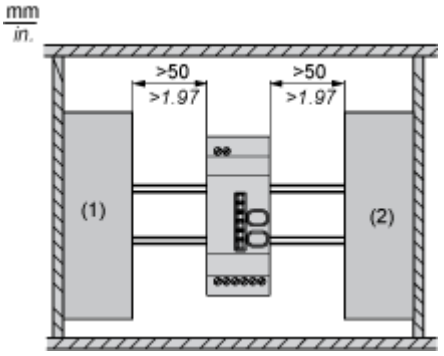

(1) Drive

(2) Power Supply or PLC

Receiver Mounting

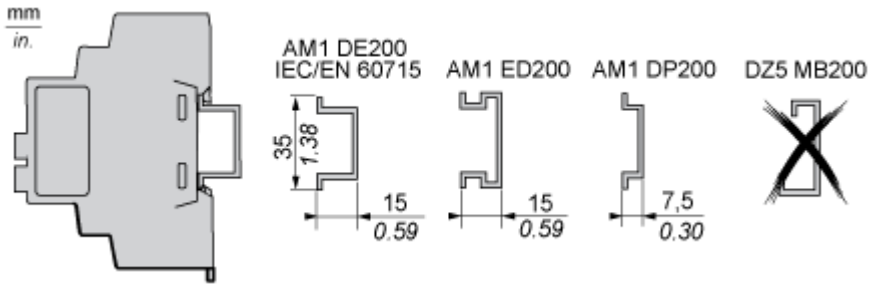

Connections and Schema

Programmable Receiver

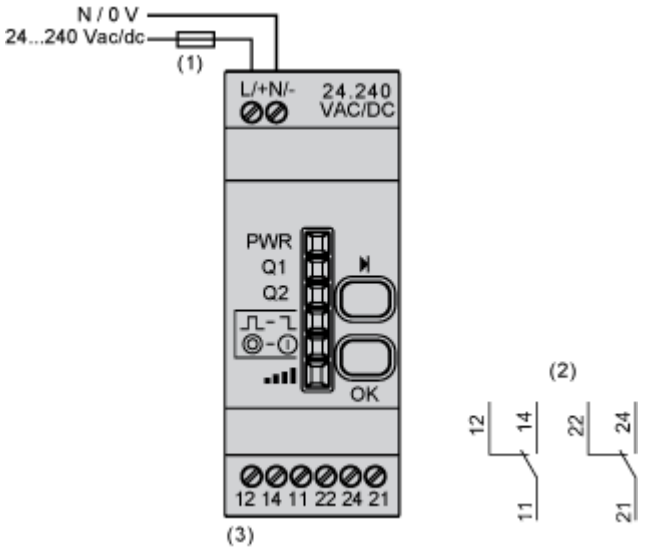

(1) 500 mA

(2) Output contacts

(3) Imax = 3 A