Product data sheet

Specifications

Green Premium™

Monolithic push button, Harmony XB6E, round white pushbutton Ø 16, flush spring return, 1OC

XB6EAA11P

Discontinued on: Jun 30, 2023

Discontinued

Main

Range Of Product	Harmony XB6E
Product Or Component Type	Monolithic push-button
Device Short Name	XB6E
Bezel Material	Plastic
Mounting Diameter	0.63 in (16 mm)
Sale Per Indivisible Quantity	5
Shape Of Signaling Unit Head	Round
Type Of Operator	spring return
Operator Profile	White flush
Contacts Type And Composition	1 C/O
Contact Operation	Snap action
Connections - Terminals	Insulated faston 2.8 x 0.5 mm Solder terminal <= 0.75 mm² AWG 19 Fast connector socket
Contacts Material	Gold-flashed silver

Complementary

Net Weight	0.01 lb(US) (0.006 kg)
Overvoltage Category	II IEC 60536
Operating Position	Any position
Marking	CE
Mechanical Durability	1000000 cycles
Tightening Torque	5.31…8.85 lbf.in (0.6…1 N.m)
Contact Resistance	50 mOhm 1/6 V
Short-Circuit Protection	2 A cartridge fuse gG
[Ith] Conventional Free Air Thermal Current	3 A fast connector socket) 5 A
[Ie] Rated Operational Current	1.5 A 120 V, AC-12 EN/IEC 60947-5-1 1 A 240 V, AC-12 EN/IEC 60947-5-1 0.7 A 240 V, AC-13 EN/IEC 60947-5-1 1 A 120 V, AC-13 EN/IEC 60947-5-1 1 A 24 V, DC-12 EN/IEC 60947-5-1 0.7 A 24 V, DC-13 EN/IEC 60947-5-1 0.2 A 125 V, DC-12 EN/IEC 60947-5-1 0.15 A 125 V, DC-13 EN/IEC 60947-5-1

Disclaimer: This documentation is not intended as a substitute for and is not to be used for determining suitability or reliability of these products for specific user applications

Electrical Durability	100000 cycles, AC, 0.7 A 220 V EN/IEC 60947-5-1 appendix C

Environment

Ambient Air Temperature For Storage	-40…158 °F (-40…70 °C)
Ambient Air Temperature For Operation	14…131 °F (-10…55 °C)
Ip Degree Of Protection	IP65 IEC 60529
Standards	UL 508 JIS C 852 IEC 60947-5-1 IEC 60947-1 JIS C 4520 CSA C22.2 No 14
Product Certifications	CCC cURus
Vibration Resistance	1 mm 10…55 Hz)IEC 60068-2-6
Shock Resistance	10 gn 11 ms) half sine wave acceleration IEC 60068-2-27

Packing Units

Unit Type Of Package 1	PCE
Number Of Units In Package 1	1
Package 1 Height	0.98 in (2.5 cm)
Package 1 Width	4.72 in (12.0 cm)
Package 1 Length	7.87 in (20.0 cm)
Package 1 Weight	0.28 oz (8.0 g)
Unit Type Of Package 2	BAG
Number Of Units In Package 2	5
Package 2 Height	1.10 in (2.8 cm)
Package 2 Width	2.87 in (7.3 cm)
Package 2 Length	7.28 in (18.5 cm)
Package 2 Weight	1.48 oz (42.0 g)
Unit Type Of Package 3	S01
Number Of Units In Package 3	50
Package 3 Height	5.91 in (15.0 cm)
Package 3 Width	5.91 in (15.0 cm)
Package 3 Length	15.75 in (40.0 cm)
Package 3 Weight	27.16 oz (770.0 g)

Contractual warranty

Warranty	18 months

Sustainability

Green Premium™ label is Schneider Electric's commitment to delivering products with best-in-class environmental performance. Green Premium promises compliance with the latest regulations, transparency on environmental impacts, as well as circular and low-CO_2 products.

Guide to assessing product sustainability is a white paper that clarifies global eco-label standards and how to interpret environmental declarations.

Learn more about Green Premium >

Guide to assess a product's sustainability >

Transparency RoHS/REACh

Well-being performance

Reach Free Of Svhc	
Toxic Heavy Metal Free	
Mercury Free	
Rohs Exemption Information	Yes

Certifications & Standards

Reach Regulation	REACh Declaration
Eu Rohs Directive	Pro-active compliance (Product out of EU RoHS legal scope) EU RoHS Declaration
China Rohs Regulation	China RoHS declaration
Environmental Disclosure	Product Environmental Profile
Weee	The product must be disposed on European Union markets following specific waste collection and never end up in rubbish bins
Circularity Profile	End of Life Information

Dimensions Drawings

Pushbutton

Circular Head

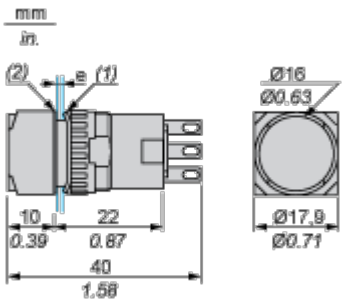

(1) Anti-rotation plate (thickness: 0.6 mm / 0.02 in.)

(2) Seal (thickness: 0.5 mm / 0.01 in.)

e panel thickness: 0.5 mm (0.01 in.) ≤ e ≤ 6 mm (0.24 in.)

Mounting and Clearance

Panel Cut-Out and Mounting
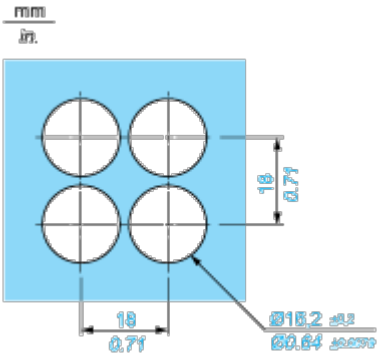
Circular or Square Head