Product data sheet

Specifications

module XPSAC - Emergency stop - 48 V AC

XPSAC1321

Main

Range Of Product	Preventa Safety automation
Product Or Component Type	Preventa safety module
Safety Module Name	XPSAC
Safety Module Application	For emergency stop and switch monitoring
Function Of Module	Emergency stop Switch monitoring
Safety Level	Can reach PL e/category 4 EN/ISO 13849-1 Can reach SILCL 3 EN/IEC 62061
Safety Reliability Data	MTTFd = 210.4 years EN/ISO 13849-1 DC > 99 % EN/ISO 13849-1 PFHd = 3.56E-9 1/h EN/IEC 62061
Type Of Start	Unmonitored
Connections - Terminals	Captive screw clamp terminals, 1 x 0.14...1 x 2.5 mm² flexible without cable end Captive screw clamp terminals, 1 x 0.14...1 x 2.5 mm² solid without cable end Captive screw clamp terminals, 1 x 0.25...1 x 1.5 mm² flexible with cable end, with bezel Captive screw clamp terminals, 1 x 0.25...1 x 2.5 mm² flexible with cable end, without bezel Captive screw clamp terminals, 2 x 0.14...2 x 0.75 mm² flexible without cable end Captive screw clamp terminals, 2 x 0.14...2 x 0.75 mm² solid without cable end Captive screw clamp terminals, 2 x 0.25...2 x 1 mm² flexible with cable end, without bezel Captive screw clamp terminals, 2 x 0.5...2 x 1.5 mm² flexible with cable end, with double bezel
Output Type	Relay instantaneous opening, 3 NO, volt-free
Number Of Additional Circuits	1 solid state output
[Us] Rated Supply Voltage	48 V AC - 15...10 %

Complementary

Supply Frequency	50/60 Hz
Maximum Power Consumption In Va	6 VA AC
[Uc] Control Circuit Voltage	48 V
Breaking Capacity	180 VA holding AC-15 C300 relay output 1800 VA inrush AC-15 C300 relay output
Breaking Capacity	1.5 A 24 V DC-13)50 ms relay output
Output Thermal Current	6 A per relay relay output
[Ith] Conventional Free Air Thermal Current	10.5 A
Associated Fuse Rating	4 A gG or gL relay output EN/IEC 60947-5-1, DIN VDE 0660 part 200 6 A fast blow relay output EN/IEC 60947-5-1, DIN VDE 0660 part 200

Disclaimer: This documentation is not intended as a substitute for and is not to be used for determining suitability or reliability of these products for specific user applications

Minimum Output Current	10 mA relay output
Minimum Output Voltage	16 V relay output
Maximum Response Time On Input Open	100 ms
[Ui] Rated Insulation Voltage	300 V 2)IEC 60947-5-1 300 V 2)DIN VDE 0110 part 1
[Uimp] Rated Impulse Withstand Voltage	4 kV III IEC 60947-5-1 4 kV III DIN VDE 0110 part 1
Local Signalling	2 LEDs
Current Consumption	100 mA 48 V AC on power supply
Mounting Support	35 mm symmetrical DIN rail
Net Weight	0.46 lb(US) (0.21 kg)

Environment

Standards	EN/IEC 60947-5-1 EN 60204-1 EN/ISO 13850 EN 1088/ISO 14119
Product Certifications	UL CSA TÜV
Ip Degree Of Protection	IP20 terminals)EN/IEC 60529 IP40 enclosure)EN/IEC 60529
Ambient Air Temperature For Operation	14…131 °F (-10…55 °C)
Ambient Air Temperature For Storage	-13…185 °F (-25…85 °C)

Packing Units

Unit Type Of Package 1	PCE
Number Of Units In Package 1	1
Package 1 Height	1.14 in (2.9 cm)
Package 1 Width	4.13 in (10.5 cm)
Package 1 Length	4.72 in (12.0 cm)
Package 1 Weight	8.43 oz (239.0 g)
Unit Type Of Package 2	S01
Number Of Units In Package 2	16
Package 2 Height	5.91 in (15.0 cm)
Package 2 Width	5.91 in (15.0 cm)
Package 2 Length	15.75 in (40.0 cm)
Package 2 Weight	9.08 lb(US) (4.12 kg)

Contractual warranty

Warranty	18 months

Sustainability

Green Premium™ label is Schneider Electric's commitment to delivering products with best-in-class environmental performance. Green Premium promises compliance with the latest regulations, transparency on environmental impacts, as well as circular and low-CO_2 products.

Guide to assessing product sustainability is a white paper that clarifies global eco-label standards and how to interpret environmental declarations.

Learn more about Green Premium >

Guide to assess a product's sustainability >

Transparency RoHS/REACh

Well-being performance

Mercury Free	
Rohs Exemption Information	Yes
Pvc Free	

Certifications & Standards

Reach Regulation	REACh Declaration
Eu Rohs Directive	Pro-active compliance (Product out of EU RoHS legal scope)
China Rohs Regulation	China RoHS declaration
Environmental Disclosure	Product Environmental Profile
Weee	The product must be disposed on European Union markets following specific waste collection and never end up in rubbish bins
Circularity Profile	End of Life Information

Dimensions Drawings
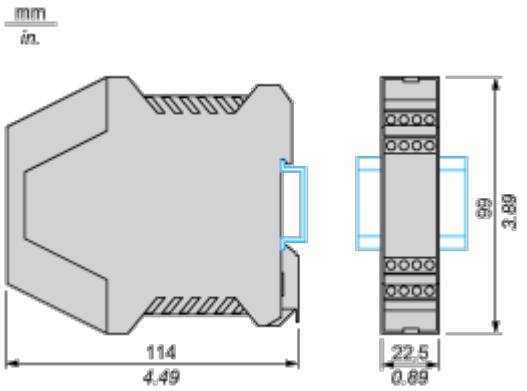
Dimensions