Product data sheet

Specifications

Green Premium™

safety module, Harmony XPS, estop or guard, connected to supply terminals 24V AC or DC , no inputs, spring

XPSBAC14AC

Main

Range Of Product	Harmony Safety Automation
Product Or Component Type	Safety module
Safety Module Name	XPSBAC
Safety Module Application	For emergency stop and protective guard applications
Function Of Module	Emergency stop button with 2 NC contacts Guard monitoring with 1 or 2 limit switches
Safety Level	Can reach PL e/category 4 for normally open relay contact ISO 13849-1 Can reach SILCL 3 for normally open relay contact IEC 62061 Can reach SIL 3 for normally open relay contact IEC 61508 Can reach PL c/category 1 for normally closed relay contact ISO 13849-1 Can reach SILCL 1 for normally closed relay contact IEC 62061 Can reach SIL 1 for normally closed relay contact IEC 61508
Safety Reliability Data	MTTFd > 30 years for normally open relay contact ISO 13849-1 Dcavg >= 99 % for normally open relay contact ISO 13849-1 PFHd = 0.95E-09 for normally open relay contact ISO 13849-1 HFT = 1 for normally open relay contact IEC 62061 PFHd = 0.95E-09 for normally open relay contact IEC 62061 SFF > 99% for normally open relay contact IEC 62061 HFT = 1 for normally open relay contact IEC 61508-1 PFHd = 0.95E-09 for normally open relay contact IEC 61508-1 SFF > 99% for normally open relay contact IEC 61508-1 Type = B for normally open relay contact IEC 61508-1 MTTFd > 30 years for normally closed relay contact ISO 13849-1 DC > 60 % for normally closed relay contact ISO 13849-1 PFHd = 0.95E-09 for normally closed relay contact ISO 13849-1 HFT=0 for normally closed relay contact IEC 62061 PFHd = 0.95E-09 for normally closed relay contact IEC 62061 SFF > 60% for normally closed relay contact IEC 62061 HFT=0 for normally closed relay contact IEC 61508-1 PFHd = 0.95E-09 for normally closed relay contact IEC 61508-1 SFF > 60% for normally closed relay contact IEC 61508-1 Type = B for normally closed relay contact IEC 61508-1
Electrical Circuit Type	NC pair
Connections - Terminals	Removable spring terminal block, 0.2...2.5 mm² solid or flexible Removable spring terminal block, 0.25...2.5 mm² flexible with ferrule single conductor Removable spring terminal block, 0.2...1.5 mm² solid or flexible twin conductor Removable spring terminal block, 2 x 0.25...1 mm² flexible with ferrule without cable end, with bezel Removable spring terminal block, 2 x 0.5...1.5 mm² flexible with ferrule with cable end, with bezel
[Us] Rated Supply Voltage	24 V AC - 15...10 % 24 V DC - 20...20 %

Complementary

Synchronisation Time Between Inputs	Unlimited
Type Of Start	Automatic/manual/monitored
Power Consumption In W	1.5 W 24 V DC

Disclaimer: This documentation is not intended as a substitute for and is not to be used for determining suitability or reliability of these products for specific user applications

Power Consumption In Va	3.5 VA 24 V AC 50/60 Hz
Input Protection Type	Internal, electronic
Safety Outputs	4 NO + 1 NC
Safety Inputs	0
Input Compatibility	Normally closed circuit ISO 14119 XC limit switch ISO 14119 Mechanical contact ISO 14119 Normally closed circuit ISO 13850
Input Terminal	Power supply
[Ie] Rated Operational Current	5 A AC-1 for normally open relay contact 3 A AC-15 for normally open relay contact 5 A DC-1 for normally open relay contact 3 A DC-13 for normally open relay contact 3 A AC-1 for normally closed relay contact 1 A AC-15 for normally closed relay contact 3 A DC-1 for normally closed relay contact 1 A DC-13 for normally closed relay contact
Control Outputs	0
[Ith] Conventional Free Air Thermal Current	6 A
Associated Fuse Rating	10 A gG NO relay output circuit IEC 60947-1
Minimum Output Current	10 mA relay output
Minimum Output Voltage	5 V relay output
Response Time	150 ms at 24 V AC 80 ms at 24 V DC
[Ui] Rated Insulation Voltage	300 V 2)IEC 60947-1
[Uimp] Rated Impulse Withstand Voltage	4 kV II IEC 60947-1
Local Signalling	LED green power power ON LED red error error LED yellow state status LED yellow start1 start input LED yellow start2 start input
Mounting Support	35 mm symmetrical DIN rail
Depth	4.72 in (120 mm)
Height	3.94 in (100 mm)
Width	0.89 in (22.5 mm)
Net Weight	0.44 lb(US) (0.200 kg)

Environment

Ambient Air Temperature For Operation	-13…131 °F (-25…55 °C)
Standards	IEC 60947-5-1 IEC 61508-1 functional safety standard IEC 61508-2 functional safety standard IEC 61508-3 functional safety standard IEC 61508-4 functional safety standard IEC 61508-5 functional safety standard IEC 61508-6 functional safety standard IEC 61508-7 functional safety standard ISO 13849-1 functional safety standard IEC 62061 functional safety standard
Product Certifications	TÜV cULus
Ip Degree Of Protection	IP20 terminals)IEC 60529 IP40 housing)IEC 60529 IP54 mounting area)IEC 60529

Relative Humidity	5…95 % non-condensing

Packing Units

Unit Type Of Package 1	PCE
Number Of Units In Package 1	1
Package 1 Height	2.56 in (6.5 cm)
Package 1 Width	5.31 in (13.5 cm)
Package 1 Length	6.10 in (15.5 cm)
Package 1 Weight	10.62 oz (301.0 g)
Unit Type Of Package 2	S03
Number Of Units In Package 2	16
Package 2 Height	11.81 in (30 cm)
Package 2 Width	11.81 in (30 cm)
Package 2 Length	15.75 in (40 cm)
Package 2 Weight	12.17 lb(US) (5.518 kg)

Sustainability

Green Premium™ label is Schneider Electric's commitment to delivering products with best-in-class environmental performance. Green Premium promises compliance with the latest regulations, transparency on environmental impacts, as well as circular and low-CO_2 products.

Guide to assessing product sustainability is a white paper that clarifies global eco-label standards and how to interpret environmental declarations.

Learn more about Green Premium >

Guide to assess a product's sustainability >

Transparency RoHS/REACh

Well-being performance

Mercury Free

Rohs Exemption Information	Yes

Certifications & Standards

Reach Regulation	REACh Declaration
Eu Rohs Directive	Pro-active compliance (Product out of EU RoHS legal scope)
China Rohs Regulation	China RoHS declaration
Environmental Disclosure	Product Environmental Profile
Weee	The product must be disposed on European Union markets following specific waste collection and never end up in rubbish bins
Circularity Profile	End of Life Information

Dimensions Drawings

Dimensions

Front and Side Views

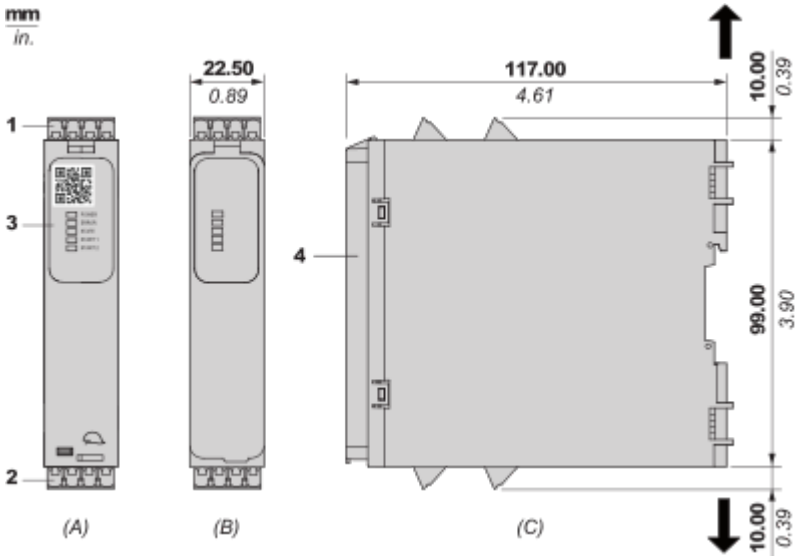

(A) : Product drawing
(B) : Spring terminal
(C) : Side view
(1) : Removable terminal blocks, top
(2) : Removable terminal blocks, bottom
(3) : LED indicators
(4) : Sealable transparent cover

mm / in. 12.0 / 0.47					
mm²	0,2...2,5	0,25...2,5	0,2...1,5	0,25...1	0,5...1,5
AWG	24...12	24...12	24...16	24...18	20...16

Mounting and Clearance

Mounting to DIN rail

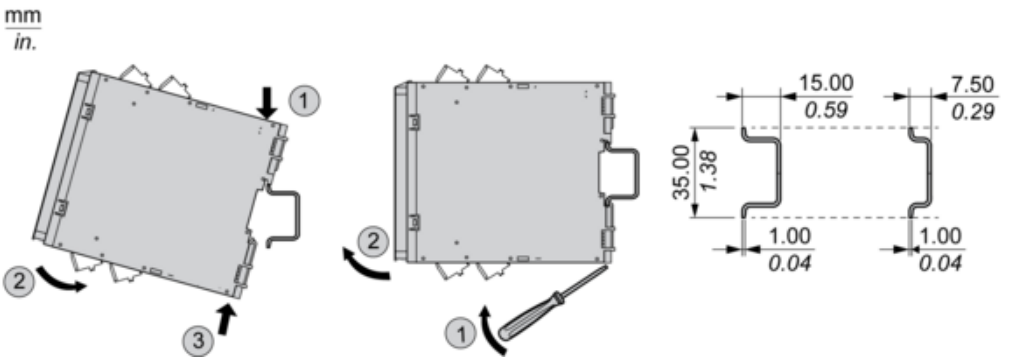

Screw-mounting

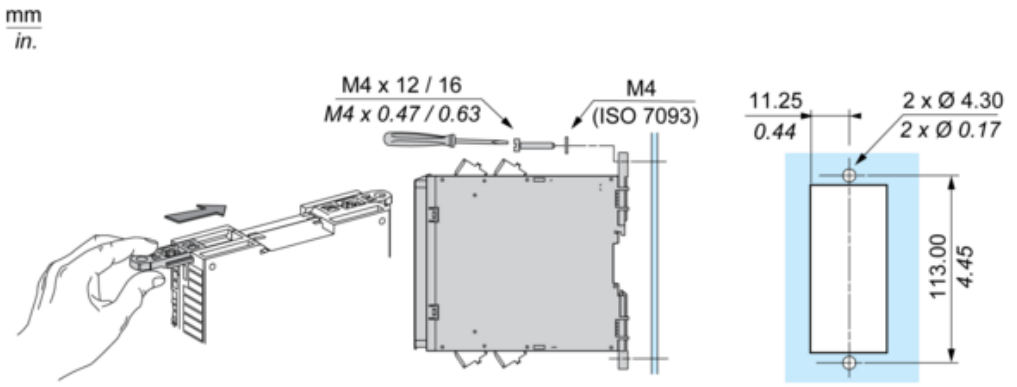

Connections and Schema

Wiring Diagram

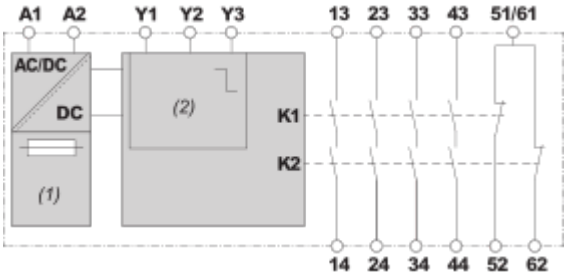

(1) : A1-A2 (Power supply)
(2) : Y1 (Control output of Start/Restart input), Y2 (Input channel for automatic/manual start/restart), Y3 (Input channel for monitored start/restart with falling edge)
13-14-23-24-33-34-43-44-51/61-52-62 : Terminals of the safety-related outputs