Product data sheet

Specifications

safety module, Harmony XPS, zero speed monitoring with time delay, 24V AC or DC, spring

XPSUVN11AC

Main

Range Of Product	Harmony Safety Automation
Product Or Component Type	Safety module
Safety Module Name	XPSUVN
Safety Module Application	For zero speed detection
Function Of Module	Monitoring 3-phase motor Monitoring 3-phase motor with star-delta starting Monitoring 3-phase motor with variable number of poles Monitoring 3-phase motor with variable number of poles and star-delta starting Monitoring dc motor Monitoring servo motor Monitoring 3-phase motor supplied by variable speed drive Monitoring 3-phase motor supplied by servo drive Controlling enegization to open of guard switch type XCSE, XCSLE, XCSLF, XCST
Safety Level	Can reach PL e/category 3 for normally open relay contact ISO 13849-1 Can reach SILCL 3 for normally open relay contact IEC 62061 Can reach SIL 3 for normally open relay contact IEC 61508
Safety Reliability Data	MTTFd > 30 years ISO 13849-1 Dcavg = 98.9 % ISO 13849-1 PFHd = 2.39E-9 1/h ISO 13849-1 HFT = 1 IEC 62061 PFHd = 2.39E-9 1/h IEC 62061 SFF > 99% IEC 62061 HFT = 1 IEC 61508-1 PFHd = 2.39E-9 1/h IEC 61508-1 SFF > 99% IEC 61508-1 Type = B IEC 61508-1
Product Certifications	TÜV cULus
[Us] Rated Supply Voltage	24 V AC - 15...10 % 24 V DC - 20...20 %
Output Type	Relay, 1 NO, volt-free
Number Of Additional Circuits	2 solid state outputs

Complementary

Maximum Power Consumption In W	2.0 W
Power Consumption In Va	5.5 VA
Input Voltage	690 V

Disclaimer: This documentation is not intended as a substitute for and is not to be used for determining suitability or reliability of these products for specific user applications

Input Detection Threshold	50 mV 65 mV 85 mV 110 mV 140 mV 180 mV 230 mV 300 mV 400 mV 500 mV
Time Delay	0.5 s 1 s 2 s 3 s 5 s 8 s 12 s 20 s 35 s 60 s
[Ie] Rated Operational Current	5 A AC-1 for normally open relay contact 3 A AC-15 for normally open relay contact 5 A DC-1 for normally open relay contact 3 A DC-13 for normally open relay contact
[Ith] Conventional Free Air Thermal Current	6 A NO relay output circuit
Associated Fuse Rating	6 A gG relay output IEC 60947-1
Standards	IEC 60947-5-1 IEC 61508-1 functional safety standard IEC 61508-2 functional safety standard IEC 61508-3 functional safety standard IEC 61508-4 functional safety standard IEC 61508-5 functional safety standard IEC 61508-6 functional safety standard IEC 61508-7 functional safety standard ISO 13849-1 functional safety standard IEC 62061 functional safety standard
Minimum Output Current	10 mA relay output
Minimum Output Voltage	5 V relay output
[Ui] Rated Insulation Voltage	690 V phase to phase 2)IEC 60947-1 400 V phase to earth 2)IEC 60947-1
[Uimp] Rated Impulse Withstand Voltage	4 kV II IEC 60947-1
Local Signalling	LED green power power ON LED red error error LED yellow state status LED yellow L12 input line comparison LED yellow L32 input line comparison
Connections - Terminals	Removable spring terminal block solid or flexible 0.2...2.5 mm² Removable spring terminal block flexible with ferrule 0.25...2.5 mm² single conductor Removable spring terminal block solid or flexible 0.2...1.5 mm² twin conductor Removable spring terminal block flexible with ferrule 2 x 0.25...1 mm² without cable end, with bezel Removable spring terminal block flexible with ferrule 2 x 0.5...1.5 mm² with cable end, with bezel
Mounting Support	35 mm symmetrical DIN rail
Depth	4.72 in (120 mm)
Height	3.94 in (100 mm)
Width	0.89 in (22.5 mm)
Net Weight	0.44 lb(US) (0.2 kg)

Environment

Ip Degree Of Protection	IP20 terminals)IEC 60529 IP40 housing)IEC 60529 IP54 mounting area)IEC 60529
Ambient Air Temperature For Operation	-13…131 °F (-25…55 °C)
Ambient Air Temperature For Storage	-40…158 °F (-40…70 °C)
Relative Humidity	5…95 % non-condensing

Packing Units

Unit Type Of Package 1	PCE
Number Of Units In Package 1	1
Package 1 Height	2.56 in (6.500 cm)
Package 1 Width	5.31 in (13.500 cm)
Package 1 Length	6.10 in (15.500 cm)
Package 1 Weight	9.24 oz (262.000 g)
Unit Type Of Package 2	S03
Number Of Units In Package 2	16
Package 2 Height	11.81 in (30.000 cm)
Package 2 Width	11.81 in (30.000 cm)
Package 2 Length	15.75 in (40.000 cm)
Package 2 Weight	10.95 lb(US) (4.969 kg)

Sustainability

Green Premium™ label is Schneider Electric's commitment to delivering products with best-in-class environmental performance. Green Premium promises compliance with the latest regulations, transparency on environmental impacts, as well as circular and low-CO_2 products.

Guide to assessing product sustainability is a white paper that clarifies global eco-label standards and how to interpret environmental declarations.

Learn more about Green Premium >

Guide to assess a product's sustainability >

Transparency RoHS/REACh

Well-being performance

Mercury Free

Rohs Exemption Information	Yes

Certifications & Standards

Reach Regulation	REACh Declaration
Eu Rohs Directive	Pro-active compliance (Product out of EU RoHS legal scope)
China Rohs Regulation	China RoHS declaration
Environmental Disclosure	Product Environmental Profile
Weee	The product must be disposed on European Union markets following specific waste collection and never end up in rubbish bins
Circularity Profile	End of Life Information

Dimensions Drawings

Dimensions

Front and Side Views

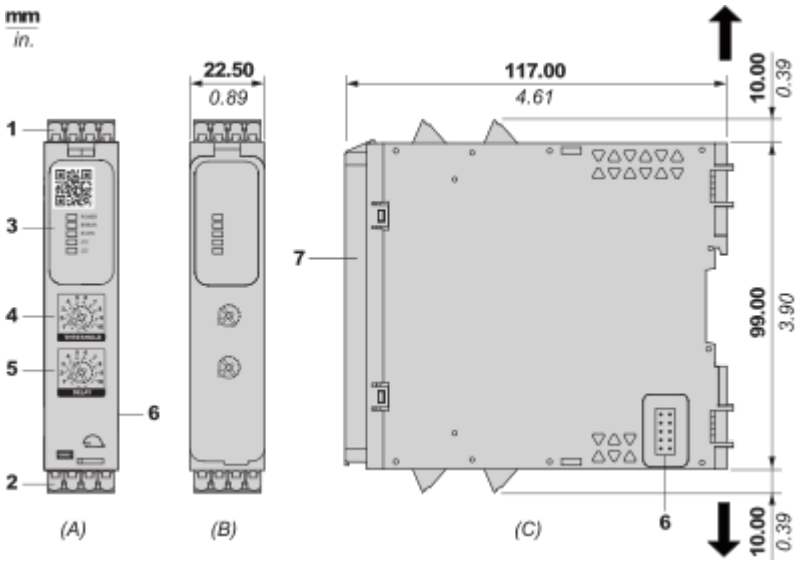

(A) : Product drawing
(B) : Spring terminal
(C) : Side view
(1) : Removable terminal blocks, top
(2) : Removable terminal blocks, bottom
(3) : LED indicators
(4) : Voltage threshold selector
(5) : Activation delay selector
(6) : Connector for optional output extension module XPSUEP (lateral)
(7) : Sealable transparent cover

mm / in. 12.0 / 0.47					
mm²	0,2...2,5	0,25...2,5	0,2...1,5	0,25...1	0,5...1,5
AWG	24...12	24...12	24...16	24...18	20...16

Mounting and Clearance

Mounting to DIN rail

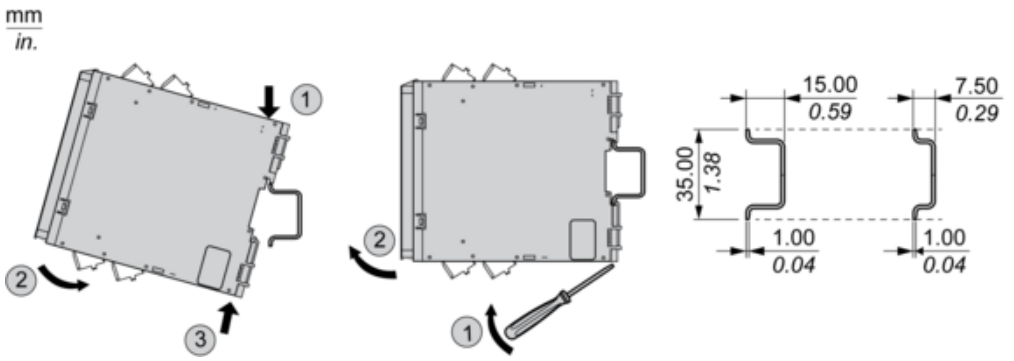

Screw-mounting

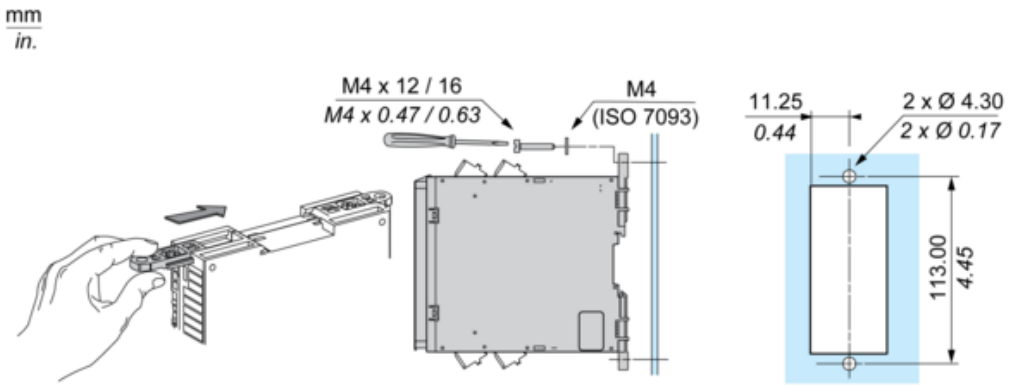

Connections and Schema

Wiring Diagram

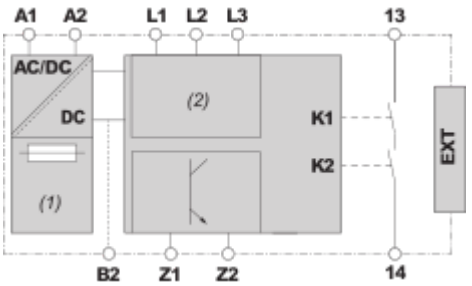

(1) : A1-A2 (Power supply)
(2) : L1-L2-L3 (Input channels of safety-related analog input)
13-14 : Terminals of the safety-related outputs
B2 : Terminal for common reference potential for 24 Vdc signals. The power supplies of the connected equipment must have a common reference potential to be connected to this terminal. In the case of XPSUVN31A•, terminal B2 must be grounded. In the case of XPSUVN11A•, the safety module is already grounded via the PELV power supply unit connected to terminals A1 and A2.
Z1 : Pulsed output for diagnostics, not safety-related
Z2 : Solid state output, not safety-related
EXIT : Connector for output extension module XPSUEP