Product data sheet

Specifications

Green Premium™

Rotating beacon, 84 mm, blue, without buzzer, 12 V AC DC

XVR08J06

Discontinued on: Feb 18, 2022

Discontinued

Main

Range Of Product	Harmony XVR
Product Or Component Type	Prewired rotating mirror beacon
Sound Signalling	Without
Device Short Name	XVR
Mounting Diameter	3.31 in (84 mm)
Ip Degree Of Protection	IP65 IEC 60529 with accessory) IP23 IEC 60529
[Us] Rated Supply Voltage	12 V AC/DC
Light Source	High luminosity LED, blue

Complementary

Material	ABS (acrylonitrile butadiene-styrene): body part PC: globe
Cad Overall Width	3.31 in (84 mm)
Cad Overall Depth	3.31 in (84 mm)
Net Weight	0.66 lb(US) (0.3 kg)
Marking	CE
Product Mounting	By 3 M4 screws
Supply Voltage Limits	10…15 V DC 10.8…13.2 V AC
[Uimp] Rated Impulse Withstand Voltage	0.8 kV
Current Consumption	250 mA
Flashing Frequency	2.3 Hz
Clamping Connection Capacity	0.83 mm²
Awg Gauge	AWG 18
Cable Length	19.69 in (500 mm)

Environment

Standards	EN 61000-6-2 EN 61000-6-4
Product Certifications	UL
Protective Treatment	TC

Disclaimer: This documentation is not intended as a substitute for and is not to be used for determining suitability or reliability of these products for specific user applications

Ambient Air Temperature For Storage	-31…158 °F (-35…70 °C)
Ambient Air Temperature For Operation	14…122 °F (-10…50 °C)
Electrical Shock Protection Class	Class II IEC 61140

Packing Units

Unit Type Of Package 1	PCE
Number Of Units In Package 1	1
Package 1 Height	3.74 in (9.5 cm)
Package 1 Width	3.74 in (9.5 cm)
Package 1 Length	7.28 in (18.5 cm)
Package 1 Weight	13.76 oz (390 g)

Contractual warranty

Warranty	18 months

Sustainability

Green Premium™ label is Schneider Electric's commitment to delivering products with best-in-class environmental performance. Green Premium promises compliance with the latest regulations, transparency on environmental impacts, as well as circular and low-CO_2 products.

Guide to assessing product sustainability is a white paper that clarifies global eco-label standards and how to interpret environmental declarations.

Learn more about Green Premium >

Guide to assess a product's sustainability >

Transparency RoHS/REACh

Well-being performance

- Toxic Heavy Metal Free
- Mercury Free
- Rohs Exemption Information — Yes

Certifications & Standards

Reach Regulation	REACh Declaration
Eu Rohs Directive	Pro-active compliance (Product out of EU RoHS legal scope) EU RoHS Declaration
China Rohs Regulation	China RoHS declaration
Environmental Disclosure	Product Environmental Profile
Weee	The product must be disposed on European Union markets following specific waste collection and never end up in rubbish bins
Circularity Profile	End of Life Information

Dimensions Drawings

Rotating Mirror Beacon

Dimensions

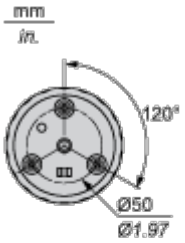

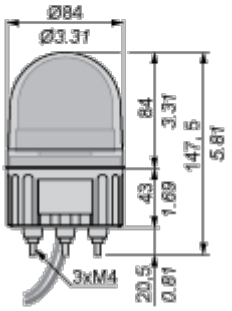

Mounting and Clearance

Rotating Mirror Beacon
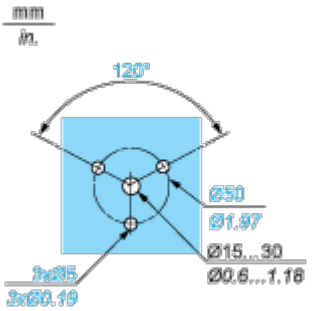
Panel Cut-out