Product datasheet

Specifications

Green Premium™

solid state relay - panel mounting - input 90-280VAC, output 48-660VAC,75A

SSP1A475M7

Discontinued on: Jun 15, 2023

Discontinued

Main

Range Of Product	Harmony Solid State Relays
Product Or Component Type	Solid state relay up to 75 A
Device Short Name	SSP1
Mounting Support	Panel
Number Of Phases	1 phase
[In] Rated Current	75 A
Solid State Output Type	Zero voltage switching SCR output
Output Switching Mode	Zero voltage switching

Complementary

Minimum Switching Voltage	90 V AC turn-on
Maximum Switching Voltage	10 V AC turn-off
Response Time	30 ms (turn-off) 25 ms (turn-on)
Input Current	5…10 mA
Load Current	0.15…75 A
Transient Overvoltage	1200 V
Surge Current	1000 A for 16.6 ms
Maximum I²T For Fusing	4150 A².s for 8.33 ms at 60 Hz 4555 A².s for 10 ms at 50 Hz
Co-Ordination Type	Type 1 - 50 A miniature circuit breaker (MCB) - curve B Type 2 - 40 A miniature circuit breaker (MCB) - curve B
Maximum Leakage Current	1 mA off-state
Maximum Voltage Drop	<1.15 V on-state
Dv/Dt	500 V/µs off-state at maximum voltage
Power Factor	0.5 (with maximum load)
Motor Controller Rating	1.5 hp 120 V AC 3 hp 240 V AC 7.5 hp 480 V AC
Insulation Resistance	1000 MOhm at 500 V DC
Maximum Capacitance	8 pF for input/output
Dielectric Strength	4 kV AC for input/output 4 kV AC for input or output to case

Price is “List Price” and may be subject to a trade discount – check with your local distributor or retailer for actual price.

Disclaimer: This documentation is not intended as a substitute for and is not to be used for determining suitability or reliability of these products for specific user applications

[Uimp] Rated Impulse Withstand Voltage	6 kV output to case 6 kV input to output
Tightening Torque	1.5...1.7 N.m for input 2...2.2 N.m for output
Connections - Terminals	Screw terminals: 0.2...3.3 mm², (AWG 24...AWG 12) with cable end for input Screw terminals: 0.5...5.26 mm², (AWG 20...AWG 10) with cable end for output Screw terminals: 0.2...3.3 mm², (AWG 24...AWG 12) without cable end for input Screw terminals: 0.5...8.26 mm², (AWG 20...AWG 8) without cable end for output Forked type tag connectors: 9.2 x 4 mm for input Ring lugs: 9.2 x 4 mm for input Forked type tag connectors: 11.7 x 4.5 mm for output Ring lugs: 11.7 x 4.5 mm for output
Thermal Resistance	0.3 °C/W junction to case
Led Indicator	LED, green for input
Ip Degree Of Protection	IP20
Safety Reliability Data	MTTFd = 1875.9 years B10d = 1731395
Net Weight	89.2 g
Device Presentation	Complete product

Environment

Ambient Air Temperature For Operation	-40…80 °C
Ambient Air Temperature For Storage	-40…125 °C
Pollution Degree	2
Overvoltage Category	III
Product Certifications	CSA EAC CE UL
Marking	UL EAC CE CSA
Standards	CSA C22.2 No 14-13 UL 508 EN/IEC 60950-1 EN/IEC 62314

Packing Units

Unit Type Of Package 1	PCE
Number Of Units In Package 1	1
Package 1 Height	3.8 cm
Package 1 Width	4.8 cm
Package 1 Length	6.7 cm
Package 1 Weight	102 g
Unit Type Of Package 2	S01
Number Of Units In Package 2	30
Package 2 Height	15 cm
Package 2 Width	15 cm
Package 2 Length	40 cm

Package 2 Weight	3.351 kg

Sustainability

Green Premium™ label is Schneider Electric's commitment to delivering products with best-in-class environmental performance. Green Premium promises compliance with the latest regulations, transparency on environmental impacts, as well as circular and low-CO_2 products.

Guide to assessing product sustainability is a white paper that clarifies global eco-label standards and how to interpret environmental declarations.

Learn more about Green Premium >

Guide to assess a product's sustainability >

Transparency RoHS/REACh

Well-being performance

Mercury Free

Rohs Exemption Information	Yes

Certifications & Standards

Reach Regulation	REACh Declaration
Eu Rohs Directive	Pro-active compliance (Product out of EU RoHS legal scope)
China Rohs Regulation	China RoHS declaration
Environmental Disclosure	Product Environmental Profile
Circularity Profile	End of Life Information

Dimensions Drawings

Dimensions

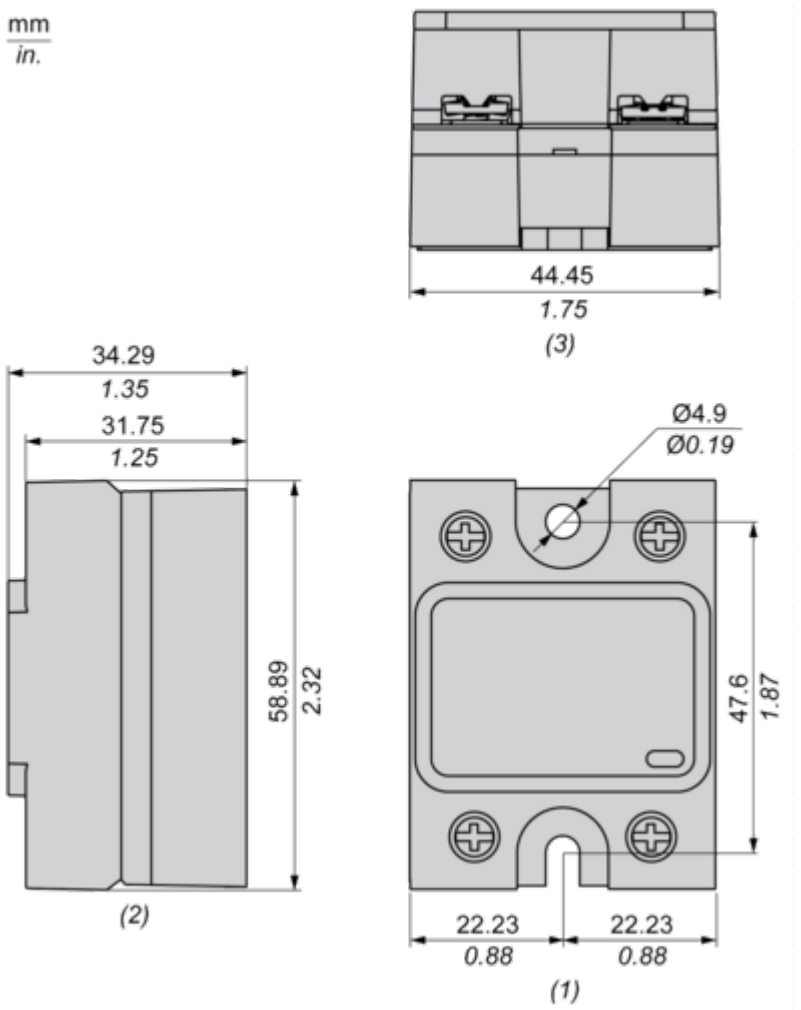

(1) Front view
(2) Side view
(3) Bottom view

Performance Curves

Derating Curves

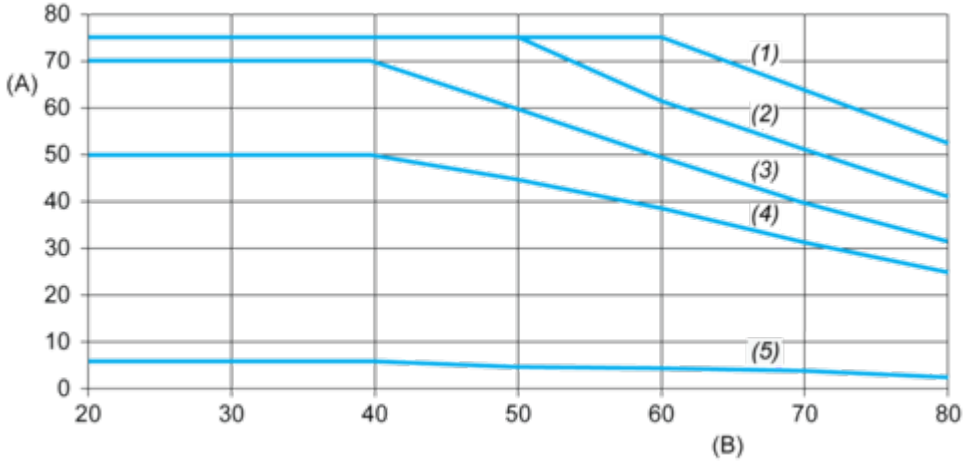

A : Load Current (Arms)
B : Ambient Temperature (°C)
(1) For Heatsink SSRHP02
(2) For Heatsink SSRHP05
(3) For Heatsink SSRHP07
(4) For Heatsink SSRHD10
(5) No Heatsink