# Product datasheet

Specifications

Green Premium™

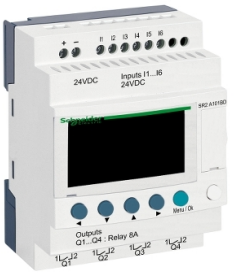

## compact smart relay, Zelio Logic SR2 SR3, 10 IO, 24V DC, no clock, display

SR2A101BD

## Main

| | |
|---|---|
| **Range Of Product** | Zelio Logic |
| **Product Or Component Type** | Compact smart relay |

## Complementary

| | |
|---|---|
| **Local Display** | With |
| **Number Or Control Scheme Lines** | 0…240 with ladder programming |
| **Cycle Time** | 6…90 ms |
| **Backup Time** | 10 years at 25 °C |
| **Clock Drift** | 12 min/year at 0…55 °C<br>6 s/month at 25 °C |
| **Checks** | Program memory on each power up |
| **[Us] Rated Supply Voltage** | 24 V DC |
| **Supply Voltage Limits** | 19.2…30 V |
| **Maximum Supply Current** | 100 mA (without extension) |
| **Power Dissipation In W** | 3 W without extension |
| **Reverse Polarity Protection** | With |
| **Discrete Input Number** | 6 conforming to IEC 61131-2 Type 1 |
| **Discrete Input Type** | Resistive |
| **Discrete Input Voltage** | 24 V DC |
| **Discrete Input Current** | 4 mA |
| **Counting Frequency** | 1 kHz for discrete input |
| **Voltage State 1 Guaranteed** | >= 15 V for I1...IA and IH...IR discrete input circuit<br>>= 15 V for IB...IG used as discrete input circuit |
| **Voltage State 0 Guaranteed** | <= 5 V for I1...IA and IH...IR discrete input circuit<br><= 5 V for IB...IG used as discrete input circuit |
| **Current State 1 Guaranteed** | >= 1.2 mA (IB...IG used as discrete input circuit)<br>>= 2.2 mA (I1...IA and IH...IR discrete input circuit) |
| **Current State 0 Guaranteed** | <= 0.5 mA (IB...IG used as discrete input circuit)<br><= 0.75 mA (I1...IA and IH...IR discrete input circuit) |
| **Input Compatibility** | 3-wire proximity sensors PNP for discrete input |
| **Analogue Input Number** | 0 |
| **Input Impedance** | 12 kOhm for IB...IG used as analogue input circuit<br>12 kOhm for IB...IG used as discrete input circuit<br>7.4 kOhm for I1...IA and IH...IR discrete input circuit |
| **Number Of Outputs** | 4 relay |

Disclaimer: This documentation is not intended as a substitute for and is not to be used for determining suitability or reliability of these products for specific user applications

| | |
|---|---|
| **Output Voltage Limits** | 24...250 V AC (relay output)<br>5...30 V DC (relay output) |
| **Contacts Type And Composition** | NO for relay output |
| **Output Thermal Current** | 8 A for all 4 outputs for relay output |
| **Electrical Durability** | AC-12: 500000 cycles at 230 V, 1.5 A for relay output conforming to IEC 60947-5-1<br>AC-15: 500000 cycles at 230 V, 0.9 A for relay output conforming to IEC 60947-5-1<br>DC-12: 500000 cycles at 24 V, 1.5 A for relay output conforming to IEC 60947-5-1<br>DC-13: 500000 cycles at 24 V, 0.6 A for relay output conforming to IEC 60947-5-1 |
| **Switching Capacity In Ma** | >= 10 mA at 12 V (relay output) |
| **Operating Rate In Hz** | 0.1 Hz (at Ie) for relay output<br>10 Hz (no load) for relay output |
| **Mechanical Durability** | 10000000 cycles for relay output |
| **[Uimp] Rated Impulse Withstand Voltage** | 4 kV conforming to EN/IEC 60947-1 and EN/IEC 60664-1 |
| **Clock** | Without |
| **Response Time** | 10 ms (from state 0 to state 1) for relay output<br>5 ms (from state 1 to state 0) for relay output |
| **Connections - Terminals** | Screw terminals, 1 x 0.2...1 x 2.5 mm² (AWG 25...AWG 14) semi-solid<br>Screw terminals, 1 x 0.2...1 x 2.5 mm² (AWG 25...AWG 14) solid<br>Screw terminals, 1 x 0.25...1 x 2.5 mm² (AWG 24...AWG 14) flexible with cable end<br>Screw terminals, 2 x 0.2...2 x 1.5 mm² (AWG 24...AWG 16) solid<br>Screw terminals, 2 x 0.25...2 x 0.75 mm² (AWG 24...AWG 18) flexible with cable end |
| **Tightening Torque** | 0.5 N.m |
| **Overvoltage Category** | III conforming to IEC 60664-1 |
| **Net Weight** | 0.25 kg |

# Environment

| | |
|---|---|
| **Immunity To Microbreaks** | 1 ms |
| **Product Certifications** | CSA<br>UL<br>C-Tick<br>GL<br>GOST |
| **Standards** | IEC 61000-4-4 level 3<br>IEC 60068-2-27 Ea<br>IEC 61000-4-3<br>IEC 61000-4-11<br>IEC 61000-4-12<br>IEC 60068-2-6 Fc<br>IEC 61000-4-6 level 3<br>IEC 61000-4-5<br>IEC 61000-4-2 level 3 |
| **Ip Degree Of Protection** | IP20 (terminal block) conforming to IEC 60529<br>IP40 (front panel) conforming to IEC 60529 |
| **Environmental Characteristic** | EMC directive conforming to IEC 61000-6-2<br>EMC directive conforming to IEC 61000-6-3<br>EMC directive conforming to IEC 61000-6-4<br>EMC directive conforming to IEC 61131-2 zone B<br>Low voltage directive conforming to IEC 61131-2 |
| **Disturbance Radiated/Conducted** | Class B conforming to EN 55022-11 group 1 |
| **Pollution Degree** | 2 conforming to IEC 61131-2 |
| **Ambient Air Temperature For Operation** | -20…40 °C in non-ventilated enclosure conforming to IEC 60068-2-1 and IEC 60068-2-2<br>-20…55 °C conforming to IEC 60068-2-1 and IEC 60068-2-2 |
| **Ambient Air Temperature For Storage** | -40…70 °C |
| **Operating Altitude** | 2000 m |

| | |
|---|---|
| **Maximum Altitude Transport** | 3048 m |
| **Relative Humidity** | 95 % without condensation or dripping water |

## Packing Units

| | |
|---|---|
| **Unit Type Of Package 1** | PCE |
| **Number Of Units In Package 1** | 1 |
| **Package 1 Height** | 7 cm |
| **Package 1 Width** | 10 cm |
| **Package 1 Length** | 9 cm |
| **Package 1 Weight** | 232 g |
| **Unit Type Of Package 2** | S03 |
| **Number Of Units In Package 2** | 30 |
| **Package 2 Height** | 30 cm |
| **Package 2 Width** | 30 cm |
| **Package 2 Length** | 40 cm |
| **Package 2 Weight** | 7.45 kg |

## Contractual warranty

| | |
|---|---|
| **Warranty** | 18 months |

## Sustainability

**Green Premium™ label** is Schneider Electric's commitment to delivering products with best-in-class environmental performance. Green Premium promises compliance with the latest regulations, transparency on environmental impacts, as well as circular and low-$CO_2$ products.

**Guide to assessing product sustainability** is a white paper that clarifies global eco-label standards and how to interpret environmental declarations.

Learn more about Green Premium >

Guide to assess a product's sustainability >

Transparency RoHS/REACh

## Well-being performance

| | |
|---|---|
| Mercury Free | |
| Rohs Exemption Information | Yes |
| Pvc Free | |

## Certifications & Standards

| | |
|---|---|
| **Reach Regulation** | REACh Declaration |
| **Eu Rohs Directive** | Pro-active compliance (Product out of EU RoHS legal scope) |
| **China Rohs Regulation** | China RoHS declaration |
| **Environmental Disclosure** | Product Environmental Profile |
| **Weee** | The product must be disposed on European Union markets following specific waste collection and never end up in rubbish bins |
| **Circularity Profile** | End of Life Information |

# Dimensions Drawings

## Compact and Modular Smart Relays

### Mounting on 35 mm/1.38 in. DIN Rail

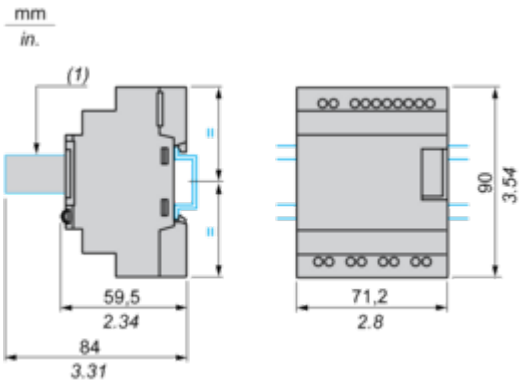


**(1)** With SR2USB01 or SR2BTC01

### Screw Fixing (Retractable Lugs)

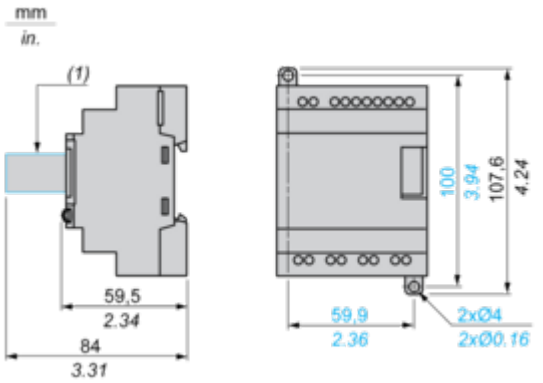


**(1)** With SR2USB01 or SR2BTC01

### Position of Display

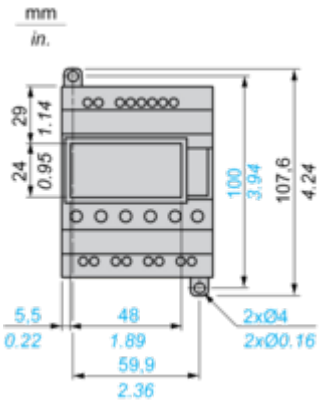

# Connections and Schema

## Compact and Modular Smart Relays

### Connection of Smart Relays on DC Supply

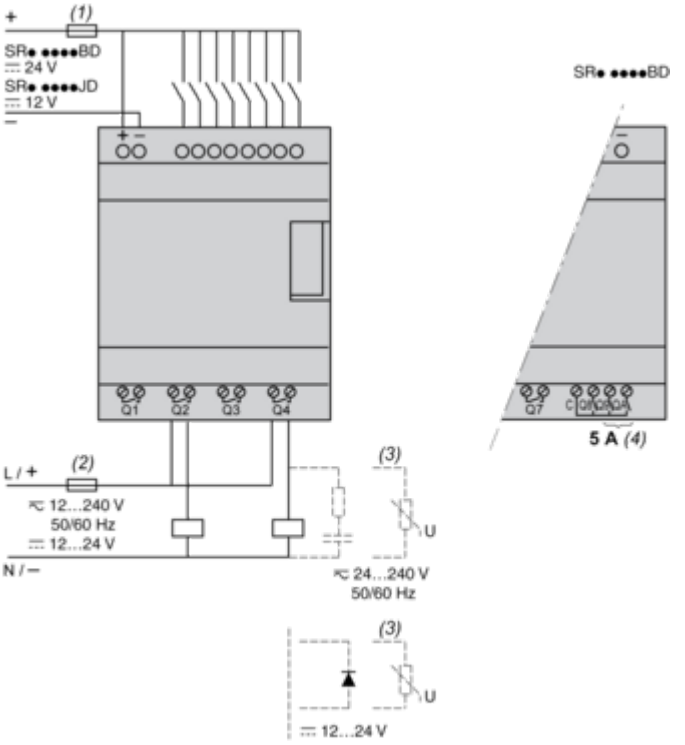


**(1)** 1 A quick-blow fuse or circuit-breaker.
**(2)** Fuse or circuit-breaker.
**(3)** Inductive load.
**(4)** Q9 and QA: 5 A (max. current in terminal C: 10 A).

### Discrete Input Used for 3-Wire Sensors

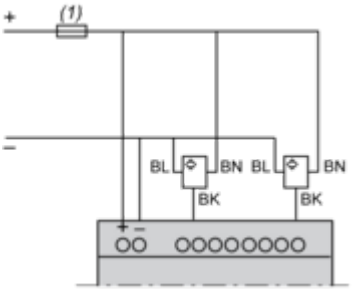


**(1)** 1 A quick-blow fuse or circuit-breaker.

# Performance Curves

## Compact and Modular Smart Relays

### Electrical Durability of Relay Outputs

(in millions of operating cycles, conforming to IEC/EN 60947-5-1)
DC-12 (1)

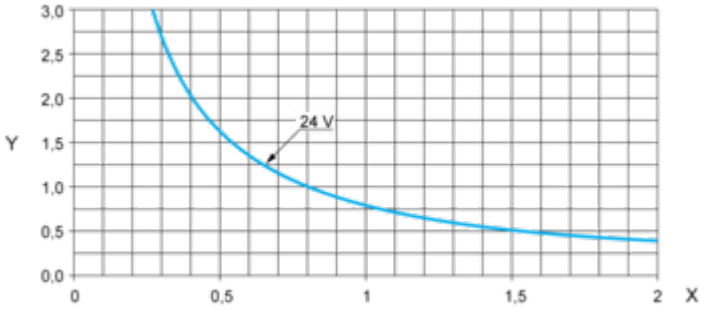


**X:** Current (A)
**Y:** Millions of operating cycles
**(1)** DC-12: control of resistive loads and of solid state loads isolated by opto-coupler, L/R ≤ 1 ms.

DC-13 (1)

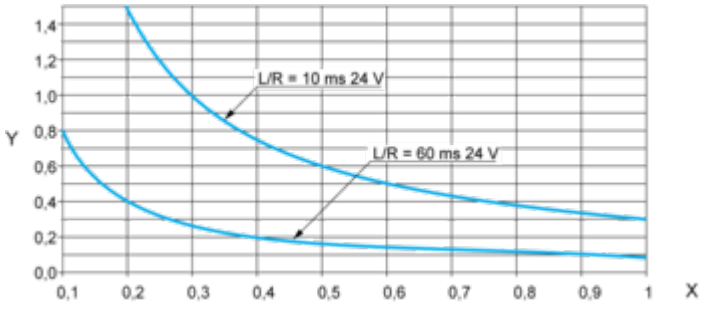


**X:** Current (A)
**Y:** Millions of operating cycles
**(1)** DC-13: switching electromagnets, L/R ≤ 2 x (Ue x Ie) in ms, Ue: rated operational voltage, Ie: rated operational current (with a protection diode on the load, DC-12 curves must be used with a coefficient of 0.9 applied to the number in millions of operating cycles).