Product datasheet

Specifications

Green Premium™

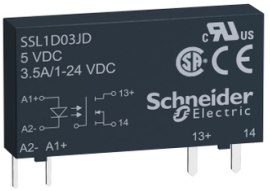

Harmony, Solid state relay, 3.5 A, DC switching, input 38…72 V DC, output 1...24 V DC

SSL1D03ND

Discontinued on: 30 Jun 2021

End-of-service on: 31 Dec 2021

Discontinued

Main

Range Of Product	Harmony Relay
Product Or Component Type	Solid state relay
Device Short Name	SSL
Network Number Of Phases	1 phase

Complementary

Mounting Support	Socket
[In] Rated Current	3.5 A
Output Voltage	1...24 V DC
[Uc] Control Circuit Voltage	38...72 V DC
Contacts Type And Configuration	1 NO
Capacitance Unbalance	1.5 pF input/output
Minimum Switching Voltage	38 V DC turn-on
Maximum Switching Voltage	15 V DC turn-off
Input Current Limits	3 mA
Input Impedance	20 kOhm
Solid State Output Type	Mosfet output DC switching
Load Current	0.001…3.5 A
Tansient Overvoltage	30 V DC
Maximum Operating Frequency	500 Hz
Surge Current	9 A for 10 ms
Maximum Voltage Drop	<0.5 V on-state
Maximum Leakage Current	0.001 mA off-state
Response Time	0.12 ms (turn-on) 0.1 ms (turn-off)
Overvoltage Category	III
Width	5 mm
Height	28 mm
Depth	15 mm
Net Weight	0.0041 kg

Disclaimer: This documentation is not intended as a substitute for and is not to be used for determining suitability or reliability of these products for specific user applications

Environment

Flame Retardance	V0 conforming to UL 94
Dielectric Strength	2500 V for input/output
Pollution Degree	2
Product Certifications	CSA UL
Marking	CE
Ambient Air Temperature For Operation	-20…80 °C
Ambient Air Temperature For Storage	-20…85 °C

Packing Units

Unit Type Of Package 1	PCE
Number Of Units In Package 1	1
Package 1 Height	0.7 cm
Package 1 Width	2.5 cm
Package 1 Length	37 cm
Package 1 Weight	5 g

Sustainability

Green Premium™ label is Schneider Electric's commitment to delivering products with best-in-class environmental performance. Green Premium promises compliance with the latest regulations, transparency on environmental impacts, as well as circular and low-CO_2 products.

Guide to assessing product sustainability is a white paper that clarifies global eco-label standards and how to interpret environmental declarations.

Learn more about Green Premium >

Guide to assess a product's sustainability >

Transparency RoHS/REACh

Well-being performance

Mercury Free

Rohs Exemption Information	Yes

Certifications & Standards

Reach Regulation	REACh Declaration
Eu Rohs Directive	Pro-active compliance (Product out of EU RoHS legal scope)
China Rohs Regulation	China RoHS declaration
Environmental Disclosure	Product Environmental Profile
Circularity Profile	End of Life Information

Dimensions Drawings

Dimensions

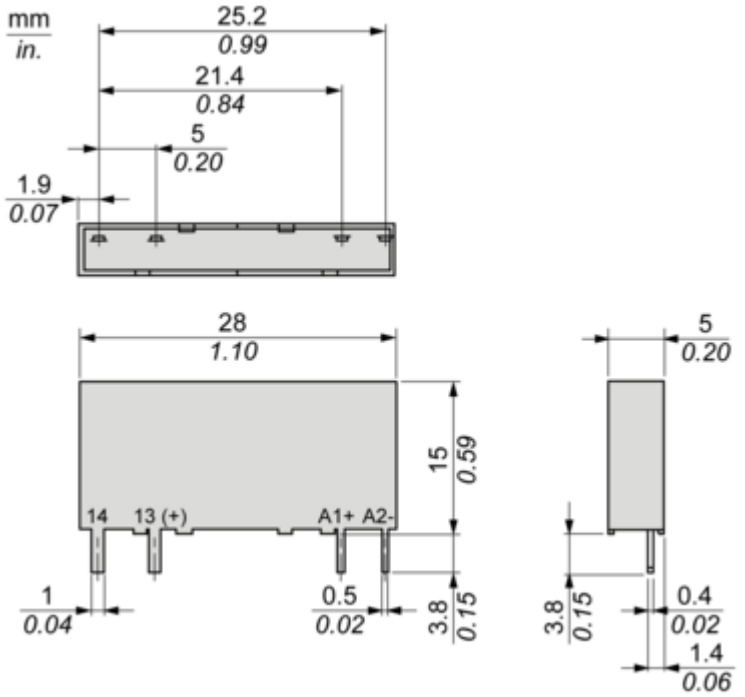

Performance Curves

Derating Curves

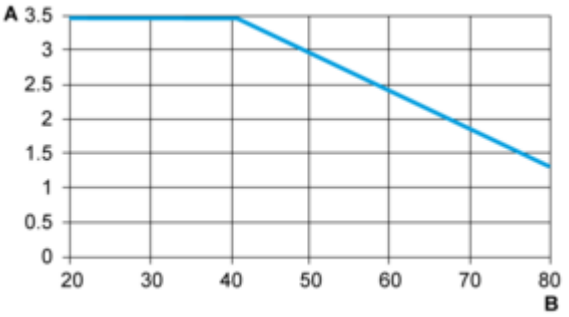

A : Load Current (Amperes)
B : Ambient Temperature (°C)