# Product datasheet

Specifications

Green Premium™

## Complete selector switch, Harmony XB6, black round, 16mm, 2 positions, stay put, 1NO + 1NC, key 200

XB6AGC5B

## Main

| | |
|---|---|
| **Range Of Product** | Harmony XB6 |
| **Product Or Component Type** | Complete selector switch |
| **Device Short Name** | XB6 |
| **Bezel Material** | Plastic |
| **Mounting Diameter** | 16 mm |
| **Sale Per Indivisible Quantity** | 1 |
| **Operating Position** | Any position |
| **Shape Of Signaling Unit Head** | Round |
| **Type Of Operator** | stay put |
| **Operator Profile** | key switch |
| **Operator Position Information** | 2 positions 70° |
| **Type Of Keylock** | Key 200 |
| **Key Withdrawal Position** | In any position |
| **Contacts Type And Composition** | 1 NO + 1 NC |
| **Contact Operation** | Slow-break |

## Complementary

| | |
|---|---|
| **Cad Overall Width** | 18 mm |
| **Cad Overall Height** | 18 mm |
| **Cad Overall Depth** | 80 mm |
| **Terminals Description Iso N°1** | (13-14)NO<br>(21-22)NC |
| **Net Weight** | 0.036 kg |
| **Positive Opening** | With conforming to IEC 60947-5-1 appendix K |
| **Mechanical Durability** | 200000 cycles |
| **Connections - Terminals** | Faston connectors, connection size: 2.8 x 0.5 mm |
| **Contacts Material** | Silver alloy (Ag/Ni) |
| **Short-Circuit Protection** | 6 A cartridge fuse type gG |
| **[Ui] Rated Insulation Voltage** | 250 V (pollution degree 3) conforming to IEC 60947-1 |
| **[Uimp] Rated Impulse Withstand Voltage** | 4 kV conforming to IEC 60947-1 |

Disclaimer: This documentation is not intended as a substitute for and is not to be used for determining suitability or reliability of these products for specific user applications

| | |
|---|---|
| **[Ie] Rated Operational Current** | 3 A at 120 V, AC-15, B300 conforming to IEC 60947-5-1<br>1.5 A at 240 V, AC-15, B300 conforming to IEC 60947-5-1<br>0.1 A at 250 V, DC-13, R300 conforming to IEC 60947-5-1<br>0.22 A at 125 V, DC-13, R300 conforming to IEC 60947-5-1 |
| **Electrical Durability** | 1000000 cycles, AC-15 at 230 V, operating rate <3600 cyc/h, load factor: 0.5 conforming to IEC 60947-5-1 appendix C<br>1000000 cycles, DC-13 at 230 V, operating rate <3600 cyc/h, load factor: 0.5 conforming to IEC 60947-5-1 appendix C |
| **Electrical Reliability** | Λ = 10exp(-8) at 5 V and 1 mA with confidence level of 90 % conforming to IEC 60947-5-4 |

# Environment

| | |
|---|---|
| **Protective Treatment** | TC |
| **Ambient Air Temperature For Storage** | -40…70 °C |
| **Ambient Air Temperature For Operation** | -25…70 °C |
| **Electrical Shock Protection Class** | Class II conforming to IEC 61140 |
| **Ip Degree Of Protection** | IP65 conforming to IEC 60529 |
| **Standards** | IEC 60947-5-5<br>UL 508<br>JIS C8201-5-1<br>CSA C22.2 No 14<br>IEC 60947-1<br>JIS C 852<br>IEC 60947-5-1<br>JIS C8201-1 |
| **Product Certifications** | UL<br>CSA<br>GOST<br>CCC |
| **Vibration Resistance** | +/- 3 mm (f= 2…500 Hz) conforming to IEC 60068-2-6<br>5 gn (f= 2…500 Hz) conforming to IEC 60068-2-6 |
| **Shock Resistance** | 30 gn (duration = 18 ms) for half sine wave acceleration conforming to IEC 60068-2-27<br>50 gn (duration = 11 ms) for half sine wave acceleration conforming to IEC 60068-2-27 |

# Packing Units

| | |
|---|---|
| **Unit Type Of Package 1** | PCE |
| **Number Of Units In Package 1** | 1 |
| **Package 1 Height** | 2.0 cm |
| **Package 1 Width** | 8.0 cm |
| **Package 1 Length** | 10.0 cm |
| **Package 1 Weight** | 33.0 g |
| **Unit Type Of Package 2** | S01 |
| **Number Of Units In Package 2** | 60 |
| **Package 2 Height** | 15.0 cm |
| **Package 2 Width** | 15.0 cm |
| **Package 2 Length** | 40.0 cm |
| **Package 2 Weight** | 2.152 kg |

# Contractual warranty

| | |
|---|---|
| **Warranty** | 18 months |

## Sustainability

**Green Premium™ label** is Schneider Electric's commitment to delivering products with best-in-class environmental performance. Green Premium promises compliance with the latest regulations, transparency on environmental impacts, as well as circular and low-$CO_2$ products.

**Guide to assessing product sustainability** is a white paper that clarifies global eco-label standards and how to interpret environmental declarations.

Learn more about Green Premium >

Guide to assess a product's sustainability >

Transparency RoHS/REACh

## Well-being performance

Mercury Free

| | |
|---|---|
| Rohs Exemption Information | Yes |

## Certifications & Standards

| | |
|---|---|
| **Reach Regulation** | REACh Declaration |
| **Eu Rohs Directive** | Pro-active compliance (Product out of EU RoHS legal scope) |
| **China Rohs Regulation** | China RoHS declaration |
| **Environmental Disclosure** | Product Environmental Profile |
| **Weee** | The product must be disposed on European Union markets following specific waste collection and never end up in rubbish bins |
| **Circularity Profile** | End of Life Information |

## Dimensions Drawings

### Circular Head Key Switch

#### Dimensions

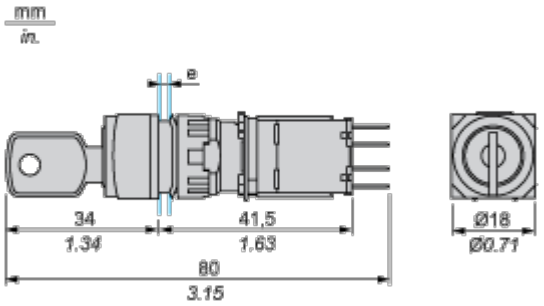


e panel thickness 1 to 6 mm/0.03 to 0.23 in.

## Mounting and Clearance

### Panel Cut-out
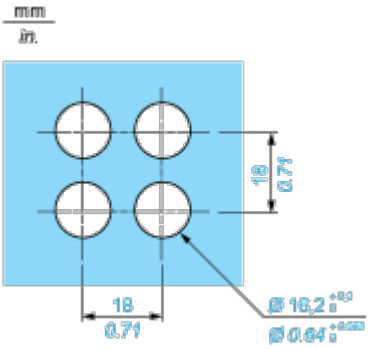
**For Square or Circular Head**