Product datasheet

Specifications

Green Premium™

Complete illuminated push button, Harmony XB6, green rectang flush, 16mm, spring return 1NO 12...24V

XB6DW3B1B

Main

Range Of Product	Harmony XB6
Product Or Component Type	Complete illuminated push-button
Device Short Name	XB6
Bezel Material	Plastic
Mounting Diameter	16 mm
Sale Per Indivisible Quantity	1
Shape Of Signaling Unit Head	Rectangular
Type Of Operator	spring return
Operator Profile	Green flush, unmarked
Contacts Type And Composition	1 NO
Contact Operation	Slow-break
Connections - Terminals	Faston connectors, connection size: 2.8 x 0.5 mm
Light Source	LED
Bulb Base	Integral LED
[Us] Rated Supply Voltage	12...24 V AC/DC

Complementary

Cad Overall Width	24 mm
Cad Overall Height	18 mm
Cad Overall Depth	57 mm
Terminals Description Iso N°1	(13-14)NO
Net Weight	0.022 kg
Operating Position	Any position
Positive Opening	With conforming to EN/IEC 60947-5-1 appendix K
Operating Travel	1 mm (NO changing electrical state) 3.5 mm (total travel)
Operating Force	3.5 N NO changing electrical state
Contacts Material	Silver alloy (Ag/Ni)
Short-Circuit Protection	6 A cartridge fuse type gG
[Ui] Rated Insulation Voltage	250 V (pollution degree 3) conforming to EN/IEC 60947-1
[Uimp] Rated Impulse Withstand Voltage	4 kV conforming to EN/IEC 60947-1

Disclaimer: This documentation is not intended as a substitute for and is not to be used for determining suitability or reliability of these products for specific user applications

[Ie] Rated Operational Current	3 A at 120 V, AC-15, B300 conforming to EN/IEC 60947-5-1 1.5 A at 240 V, AC-15, B300 conforming to EN/IEC 60947-5-1 0.1 A at 250 V, DC-13, R300 conforming to EN/IEC 60947-5-1 0.22 A at 125 V, DC-13, R300 conforming to EN/IEC 60947-5-1
Electrical Durability	1000000 cycles, AC-15 at 230 V, operating rate <3600 cyc/h, load factor: 0.5 conforming to EN/IEC 60947-5-1 appendix C 1000000 cycles, DC-13 at 230 V, operating rate <3600 cyc/h, load factor: 0.5 conforming to EN/IEC 60947-5-1 appendix C
Electrical Reliability	Λ = 10exp(-8) at 5 V and 1 mA with confidence level of 90 % conforming to IEC 60947-5-4
Signalling Type	Steady
Supply Voltage Limits	6…30 V AC/DC
Current Consumption	15 mA
Surge Withstand	1 kV direct contact conforming to IEC 61000-4-5 2 kV in free air conforming to IEC 61000-4-5

Environment

Protective Treatment	TC
Ambient Air Temperature For Storage	-40…70 °C
Ambient Air Temperature For Operation	-25…70 °C
Electrical Shock Protection Class	Class II conforming to IEC 61140
Ip Degree Of Protection	IP65 conforming to IEC 60529
Nema Degree Of Protection	NEMA 13 conforming to UL 50 NEMA 4 conforming to UL 50 NEMA 4X conforming to UL 50 NEMA 13 conforming to CSA C22.2 No 94 NEMA 4 conforming to CSA C22.2 No 94 NEMA 4X conforming to CSA C22.2 No 94
Standards	JIS C 852 EN/IEC 60947-5-5 EN/IEC 60947-5-1 JIS C 4520 EN/IEC 60947-1 CSA C22.2 No 14
Product Certifications	UL CCC GOST CSA
Vibration Resistance	+/- 3 mm (f= 2…500 Hz) conforming to IEC 60068-2-6 5 gn (f= 2…500 Hz) conforming to IEC 60068-2-6
Shock Resistance	30 gn (duration = 18 ms) for half sine wave acceleration conforming to IEC 60068-2-27 50 gn (duration = 11 ms) for half sine wave acceleration conforming to IEC 60068-2-27
Resistance To Fast Transients	2 kV conforming to IEC 61000-4-4
Resistance To Electromagnetic Fields	10 V/m conforming to IEC 61000-4-3
Resistance To Electrostatic Discharge	6 kV on contact (on metal parts) conforming to IEC 61000-4-2 8 kV in free air (in insulating parts) conforming to IEC 61000-4-2
Electromagnetic Emission	Class B conforming to IEC 55011

Packing Units

Unit Type Of Package 1	PCE
Number Of Units In Package 1	1
Package 1 Height	2.000 cm

Package 1 Width	2.500 cm
Package 1 Length	5.500 cm
Package 1 Weight	15.200 g
Unit Type Of Package 2	S01
Number Of Units In Package 2	60
Package 2 Height	15.000 cm
Package 2 Width	15.000 cm
Package 2 Length	40.000 cm
Package 2 Weight	1.061 kg
Unit Type Of Package 3	P06
Number Of Units In Package 3	1920
Package 3 Height	75.000 cm
Package 3 Width	80.000 cm
Package 3 Length	60.000 cm
Package 3 Weight	41.952 kg

Contractual warranty

Warranty	18 months

Sustainability

Green Premium™ label is Schneider Electric's commitment to delivering products with best-in-class environmental performance. Green Premium promises compliance with the latest regulations, transparency on environmental impacts, as well as circular and low-CO_2 products.

Guide to assessing product sustainability is a white paper that clarifies global eco-label standards and how to interpret environmental declarations.

Learn more about Green Premium >

Guide to assess a product's sustainability >

Transparency RoHS/REACh

Well-being performance

Mercury Free

Rohs Exemption Information	Yes

Certifications & Standards

Reach Regulation	REACh Declaration
Eu Rohs Directive	Pro-active compliance (Product out of EU RoHS legal scope)
China Rohs Regulation	China RoHS declaration
Environmental Disclosure	Product Environmental Profile
Weee	The product must be disposed on European Union markets following specific waste collection and never end up in rubbish bins
Circularity Profile	End of Life Information

Dimensions Drawings

Rectangular Head Pushbutton

Dimensions

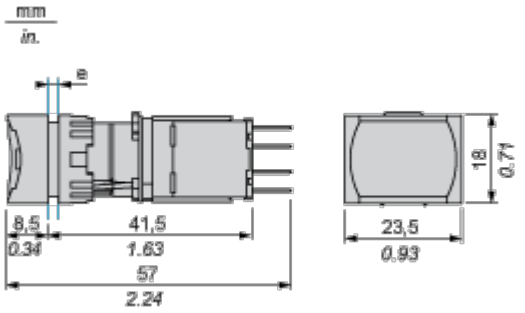

e panel thickness 1 to 6 mm/0.03 to 2.48 in.

Mounting and Clearance

Panel Cut-out
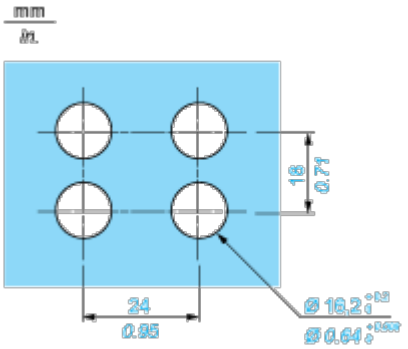
For Rectangular Head