Product datasheet

Specifications

Illuminated push button, Harmony XB7, green projecting, 22mm, integral LED, push and push to release, 1NO, 230V AC

XB7NJ03M1

Main

Range Of Product	Harmony XB7
Product Or Component Type	Illuminated push-button
Device Short Name	XB7
Mounting Diameter	22 mm
Sale Per Indivisible Quantity	10
Ip Degree Of Protection	IP20 (rear face) conforming to IEC 60529 IP65 (front face) conforming to IEC 60529
Shape Of Signaling Unit Head	Round
Type Of Operator	push and push-to-release
Operator Profile	Green projecting, unmarked
Operator Additional Information	With plain lens
Contacts Type And Composition	1 NO
Connections - Terminals	Screw clamp terminals, <= 2 x 1.5 mm² with cable end conforming to IEC 60947-1 Screw clamp terminals, 1 x 0.34...2 x 2.5 mm² without cable end conforming to IEC 60947-1
Light Source	LED
Bulb Base	Integral LED
[Us] Rated Supply Voltage	230 V AC at 50/60 Hz
Device Presentation	Monolithic product

Complementary

Cad Overall Width	29 mm
Cad Overall Height	29 mm
Cad Overall Depth	57.5 mm
Terminals Description Iso N°1	(13-14)NO
Net Weight	0.023 kg
Device Mounting	Fixing hole - diameter: 22.5 mm 22.3 +0.4/0 conforming to IEC 60947-1
Fixing Center	>= 30 x 40 mm (support panel) metal - thickness: 1…6 mm >= 30 x 40 mm (support panel) plastic - thickness: 2…6 mm
Fixing Mode	Fixing nut beneath head: 2…2.4 N.m
Contact Operation	Slow-break
Positive Opening	With (only NO)
Mechanical Durability	300000 cycles

Disclaimer: This documentation is not intended as a substitute for and is not to be used for determining suitability or reliability of these products for specific user applications

Tightening Torque	0.8…1.2 N.m conforming to IEC 60947-1
Shape Of Screw Head	Cross compatible with JIS No 1 screwdriver Cross compatible with Philips no 1 screwdriver Cross compatible with pozidriv No 1 screwdriver Slotted compatible with flat Ø 4 mm screwdriver Slotted compatible with flat Ø 5.5 mm screwdriver
Short-Circuit Protection	4 A cartridge fuse type gG conforming to IEC 60947-5-1
[Ui] Rated Insulation Voltage	250 V (pollution degree 3) conforming to IEC 60947-1
[Uimp] Rated Impulse Withstand Voltage	4 kV conforming to IEC 60947-1
[Ie] Rated Operational Current	0.1 A at 250 V, DC-13, R300 conforming to IEC 60947-5-1 0.22 A at 125 V, DC-13, R300 conforming to IEC 60947-5-1 0.3 A at 240 V, AC-14, D300 conforming to IEC 60947-5-1 0.6 A at 120 V, AC-14, D300 conforming to IEC 60947-5-1
Electrical Durability	1000000 cycles, DC-13, 0.3 A at 24 V, operating rate <216000 cyc/mn, load factor: 0.5 conforming to IEC 60947-5-1 appendix C 1000000 cycles, AC-15, 0.03 A at 230 V, operating rate <216000 cyc/mn, load factor: 0.5 conforming to IEC 60947-5-1 appendix C 1000000 cycles, AC-15, 0.09 A at 240 V, operating rate <108000 cyc/mn, load factor: 0.5 conforming to IEC 60947-5-1 appendix C
Electrical Reliability	Λ <= 10exp(-6) at 17 V and 5 mA conforming to IEC 60947-5-4
Signalling Type	Steady
Supply Voltage Limits	195…264 V AC
Current Consumption	22...27 mA
Service Life	70000 h at rated voltage and 25 °C

Environment

Protective Treatment	TH
Ambient Air Temperature For Storage	-40…70 °C
Ambient Air Temperature For Operation	-25…70 °C
Electrical Shock Protection Class	Class II conforming to IEC 61140
Nema Degree Of Protection	NEMA 12 conforming to UL 50 E
Standards	UL 508 IEC 60947-5-1 JIS C8201-5-1 CSA C22.2 No 14 IEC 60947-1 JIS C8201-1
Product Certifications	GOST CCC
Vibration Resistance	5 gn (f= 2…500 Hz) conforming to IEC 60068-2-6
Shock Resistance	50 gn (duration = 11 ms) for half sine wave acceleration conforming to IEC 60068-2-27 30 gn (duration = 18 ms) for half sine wave acceleration
Electromagnetic Emission	Class B conforming to IEC 55011

Packing Units

Unit Type Of Package 1	PCE
Number Of Units In Package 1	1
Package 1 Height	6.0 cm
Package 1 Width	3.2 cm
Package 1 Length	3.2 cm

Package 1 Weight	24.0 g

Contractual warranty

Warranty	18 months

Sustainability

Green Premium™ label is Schneider Electric's commitment to delivering products with best-in-class environmental performance. Green Premium promises compliance with the latest regulations, transparency on environmental impacts, as well as circular and low-CO_2 products.

Guide to assessing product sustainability is a white paper that clarifies global eco-label standards and how to interpret environmental declarations.

Learn more about Green Premium >

Guide to assess a product's sustainability >

Transparency RoHS/REACh

Well-being performance

Mercury Free

Rohs Exemption Information	Yes

Certifications & Standards

Reach Regulation	REACh Declaration
Eu Rohs Directive	Pro-active compliance (Product out of EU RoHS legal scope)
China Rohs Regulation	China RoHS declaration
Environmental Disclosure	Product Environmental Profile
Weee	The product must be disposed on European Union markets following specific waste collection and never end up in rubbish bins
Circularity Profile	End of Life Information

Dimensions Drawings

Illuminated Pushbutton

Dimensions

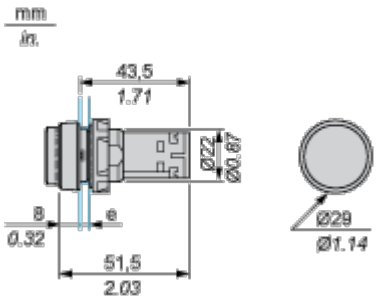

e Support panel thickness: 1 to 6 mm/0.4 to 0.24 in. (metal), 2 to 6 mm/0.8 to 0.24 in. (plastic).

Mounting and Clearance

Mounting

Diameter of Finished Fixing Holes

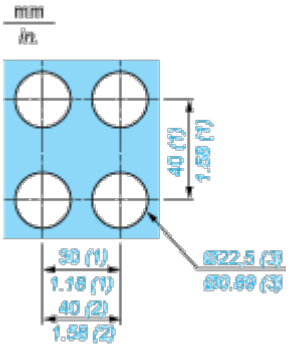

(1) Minimum value.

(2) 40 mm/1.58 in. for Emergency switching off pushbutton only.

(3) Standard value: Ø 22.3 (0; + 0.4) mm/Ø 0.88 (0; + 0.02) in.

“U” Type Tag Connection

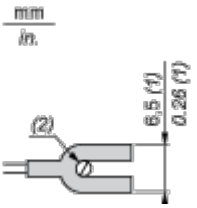

(1) 6.5 mm/0.26 in. recommended, 7 mm/0.28 in. max.

(2) M3 screw clamp terminal.

Connections and Schema
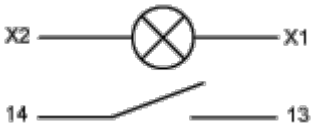
Wiring