# Product datasheet

Specifications

Green Premium™

## single contact block with body/ fixing collar 1NO+1NC plug-in connector

ZB5AZ1054

Discontinued on: 20 Oct 2020

Discontinued

## Main

| | |
|---|---|
| **Range Of Product** | Harmony XB5 |
| **Product Or Component Type** | Complete body/contact assembly |
| **Device Short Name** | ZB5 |
| **Fixing Collar Material** | Plastic |
| **Sale Per Indivisible Quantity** | 1 |
| **Head Type** | Standard |
| **Contacts Type And Composition** | 1 NO + 1 NC |
| **Contact Operation** | Slow-break |
| **Contact Block Type** | Single |
| **Connections - Terminals** | Plug-in connector |

## Complementary

| | |
|---|---|
| **Cad Overall Width** | 30 mm |
| **Cad Overall Height** | 42 mm |
| **Cad Overall Depth** | 32 mm |
| **Terminals Description Iso N°1** | (11-12)NC<br>(13-14)NO |
| **Net Weight** | 0.026 kg |
| **Device Composition** | Fixing collar<br>Body |
| **Contacts Usage** | Standard contacts |
| **Positive Opening** | With conforming to EN/IEC 60947-5-1 appendix K |
| **Operating Travel** | 1.5 mm (NC changing electrical state)<br>2.6 mm (NO changing electrical state)<br>4.3 mm (total travel) |
| **Mechanical Durability** | 10000000 cycles |
| **Contacts Material** | Silver alloy (Ag/Ni) |
| **Short-Circuit Protection** | 4 A cartridge fuse type gG conforming to EN/IEC 60947-5-1 |
| **[Ith] Conventional Free Air Thermal Current** | 10 A conforming to EN/IEC 60947-5-1 |
| **[Ui] Rated Insulation Voltage** | 250 V (pollution degree 3) conforming to EN 60947-1 |
| **[Uimp] Rated Impulse Withstand Voltage** | 4 kV conforming to EN 60947-1 |

Disclaimer: This documentation is not intended as a substitute for and is not to be used for determining suitability or reliability of these products for specific user applications

| | |
|---|---|
| **[Ie] Rated Operational Current** | 3 A at 240 V, AC-15, A300 conforming to EN/IEC 60947-5-1<br>6 A at 120 V, AC-15, A300 conforming to EN/IEC 60947-5-1<br>0.1 A at 250 V, DC-13, R300 conforming to EN/IEC 60947-5-1<br>0.22 A at 125 V, DC-13, R300 conforming to EN/IEC 60947-5-1 |
| **Electrical Durability** | 1000000 cycles, AC-15, 1 A at 230 V, operating rate <3600 cyc/h, load factor: 0.5 conforming to EN/IEC 60947-5-1 appendix C<br>1000000 cycles, AC-15, 1.5 A at 120 V, operating rate <3600 cyc/h, load factor: 0.5 conforming to EN/IEC 60947-5-1 appendix C<br>1000000 cycles, AC-15, 3 A at 24 V, operating rate <3600 cyc/h, load factor: 0.5 conforming to EN/IEC 60947-5-1 appendix C<br>1000000 cycles, DC-13, 0.15 A at 110 V, operating rate <3600 cyc/h, load factor: 0.5 conforming to EN/IEC 60947-5-1 appendix C<br>1000000 cycles, DC-13, 0.4 A at 24 V, operating rate <3600 cyc/h, load factor: 0.5 conforming to EN/IEC 60947-5-1 appendix C |
| **Electrical Reliability** | Λ < 10exp(-6) at 5 V, 1 mA in clean environment conforming to EN/IEC 60947-5-4<br>Λ < 10exp(-8) at 17 V, 5 mA in clean environment conforming to EN/IEC 60947-5-4 |

# Environment

| | |
|---|---|
| **Protective Treatment** | TH |
| **Ambient Air Temperature For Storage** | -40…70 °C |
| **Ambient Air Temperature For Operation** | -40…70 °C |
| **Ip Degree Of Protection** | IP20 conforming to IEC 60529 |
| **Standards** | EN/IEC 60947-1<br>CSA C22.2 No 14<br>EN/IEC 60947-5-4<br>JIS C8201-5-1<br>EN/IEC 60947-5-1<br>JIS C8201-1 |
| **Product Certifications** | CSA<br>GL<br>DNV<br>BV<br>LROS (Lloyds register of shipping) |
| **Vibration Resistance** | 5 gn (f= 2…500 Hz) conforming to IEC 60068-2-6 |
| **Shock Resistance** | 30 gn (duration = 18 ms) for half sine wave acceleration conforming to IEC 60068-2-27<br>50 gn (duration = 11 ms) for half sine wave acceleration conforming to IEC 60068-2-27 |

# Packing Units

| | |
|---|---|
| **Unit Type Of Package 1** | PCE |
| **Number Of Units In Package 1** | 1 |
| **Package 1 Height** | 3.4 cm |
| **Package 1 Width** | 4.5 cm |
| **Package 1 Length** | 5.4 cm |
| **Package 1 Weight** | 26 g |

# Contractual warranty

| | |
|---|---|
| **Warranty** | 18 months |

## Sustainability

**Green Premium™ label** is Schneider Electric's commitment to delivering products with best-in-class environmental performance. Green Premium promises compliance with the latest regulations, transparency on environmental impacts, as well as circular and low-$CO_2$ products.

**Guide to assessing product sustainability** is a white paper that clarifies global eco-label standards and how to interpret environmental declarations.

Learn more about Green Premium >

Guide to assess a product's sustainability >

Transparency RoHS/REACh

## Well-being performance

| | |
|---|---|
| Reach Free Of Svhc | |
| Toxic Heavy Metal Free | |
| Mercury Free | |
| Rohs Exemption Information | Yes |

## Certifications & Standards

| | |
|---|---|
| **Reach Regulation** | REACh Declaration |
| **Eu Rohs Directive** | Pro-active compliance (Product out of EU RoHS legal scope)<br>EU RoHS Declaration |
| **China Rohs Regulation** | China RoHS declaration |
| **Environmental Disclosure** | Product Environmental Profile |
| **Weee** | The product must be disposed on European Union markets following specific waste collection and never end up in rubbish bins |
| **Circularity Profile** | End of Life Information |

Dimensions Drawings

**Dimensions**

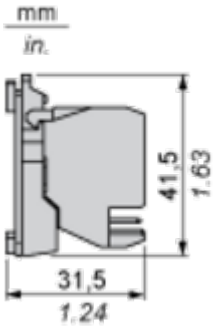

## Mounting and Clearance

### Panel Cut-out for Pushbuttons, Switches and Pilot Lights (Finished Holes, Ready for Installation)

### Connection by Screw Clamp Terminals or Plug-in Connectors or on Printed Circuit Board

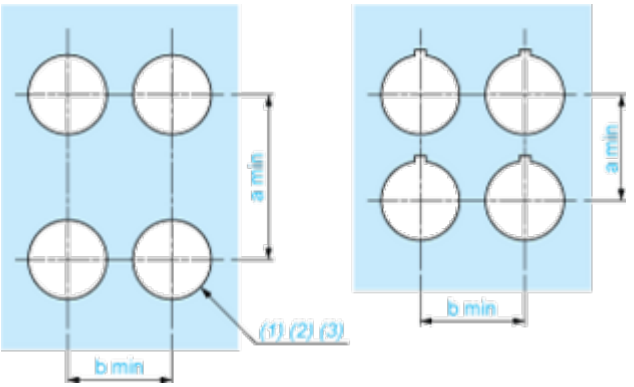


**(1)** Diameter on finished panel or support
**(2)** For selector switches and Emergency stop buttons, use of an anti-rotation plate type ZB5AZ902 is recommended.
**(3)** Ø22.5 mm recommended (Ø22.3 $_{0}^{+0.4}$) / Ø0.89 in. recommended (Ø0.88 in. $_{0}^{+0.016}$)

| Connections | a in mm | a in in. | b in mm | b in in. |
|---|---|---|---|---|
| By screw clamp terminals or plug-in connector | 40 | 1.57 | 30 | 1.18 |
| By Faston connectors | 45 | 1.77 | 32 | 1.26 |
| On printed circuit board | 30 | 1.18 | 30 | 1.18 |

### Detail of Lug Recess

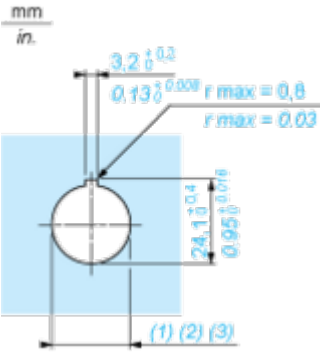


**(1)** Diameter on finished panel or support
**(2)** For selector switches and Emergency stop buttons, use of an anti-rotation plate type ZB5AZ902 is recommended.
**(3)** Ø22.5 mm recommended (Ø22.3 $_{0}^{+0.4}$) / Ø0.89 in. recommended (Ø0.88 in. $_{0}^{+0.016}$)