Product datasheet

Specifications

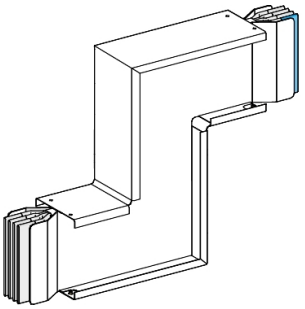

Edgewise zed unit, Canalis KTA, aluminium, 2500A, 3L+PE, made to measure, neutral N2, white RAL9001

KTA2500ZC32

Main

Range	Canalis
Product Name	KT
Product Or Component Type	Zed elbow
Busbar Description	Standard
Device Short Name	KTA
Device Application	Change direction
Material	Aluminium
[Ie] Rated Operational Current	2500 A at 35 °C
Polarity	3L + PE
Direction Change Type	direction 2: edgewise to horizontal direction 1: edgewise to downward
Operating Angle	90 °
Earth Conductor	Standard earth
Short-Circuit Level	Standard version
Provided Equipment	Trunking unit Jointing unit

Complementary

Housing Material	Polyester film
Contacts Material	Copper
[Ue] Rated Operational Voltage	1000 V
Network Frequency	50/60 Hz
[Ui] Rated Insulation Voltage	1000 V
[Icw] Rated Short-Time Withstand Current	113 kA
[Ipk] Rated Peak Withstand Current	248 kA
Radiated Magnetic Field	1.6 µT
Thermal Stress Limit	6400000 kA².s
Thdi	0…15 % 2500 A 15…33 % 3200 A 33…100 % 4000 A
Maximum Voltage Drop	<0.0024 V with power factor = 1 at 50 Hz with 1A for 100 m long <0.0025 V with power factor = 0.9 at 50 Hz with 1A for 100 m long <0.0024 V with power factor = 0.8 at 50 Hz with 1A for 100 m long <0.0022 V with power factor = 0.7 at 50 Hz with 1A for 100 m long

Disclaimer: This documentation is not intended as a substitute for and is not to be used for determining suitability or reliability of these products for specific user applications

Neutral Position	Right
Standards	IEC 61439-1 IEC 61439-6
Dimension Type	Made to measure
Width	140 mm
Height	direction 2: 90…719 mm
Colour	White (RAL 9001)
Length	direction 3: 360 mm direction 1: 360 mm
Linear Load	25 kg/m

Environment

Ip Degree Of Protection	IP55 conforming to IEC 60529
Ik Degree Of Protection	IK08 conforming to IEC 62262
Derating Factor	0…35 °C (100 % of In) 35…40 °C (97 % of In) 40…45 °C (93 % of In) 45…50 °C (90 % of In) 50…55 °C (86 % of In)

Packing Units

Unit Type Of Package 1	PCE
Number Of Units In Package 1	1
Package 1 Height	14.0 cm
Package 1 Width	76.0 cm
Package 1 Length	124.4 cm
Package 1 Weight	62.5 kg

Sustainability

Green Premium™ label is Schneider Electric's commitment to delivering products with best-in-class environmental performance. Green Premium promises compliance with the latest regulations, transparency on environmental impacts, as well as circular and low-CO_2 products.

Guide to assessing product sustainability is a white paper that clarifies global eco-label standards and how to interpret environmental declarations.

Learn more about Green Premium >

Guide to assess a product's sustainability >

Transparency RoHS/REACh

Well-being performance

Mercury Free

Rohs Exemption Information	Yes

Certifications & Standards

Reach Regulation	REACh Declaration
Eu Rohs Directive	Compliant with Exemptions
China Rohs Regulation	China RoHS declaration Product out of China RoHS scope. Substance declaration for your information
Environmental Disclosure	Product Environmental Profile
Weee	The product must be disposed on European Union markets following specific waste collection and never end up in rubbish bins
Circularity Profile	End of Life Information