Product datasheet

Specifications

Green Premium™

phase control relay RM17-T - range 183..528 V AC

RM17TG00

Main

Range Of Product	Harmony Control Relays
Relay Type	Control relay
Product Or Component Type	3-phase control relay
Product Specific Application	For 3-phase supply
Relay Name	RM17TG
Relay Monitored Parameters	Phase sequence Phase failure detection (2 or more phase cut)
Time Delay	Without
Switching Capacity In Va	1250 VA
Measurement Range	208...480 V AC
Contacts Type And Composition	1 C/O
[Uc] Control Circuit Voltage	208...480 V

Complementary

Maximum Switching Voltage	250 V AC 250 V DC
Minimum Switching Current	10 mA at 5 V DC
[Un] Rated Nominal Voltage	, self-powered
Supply Voltage Limits	183…528 V AC
Control Circuit Voltage Limits	- 12 % + 10 % Un
Power Consumption In Va	0…22 VA at 400 V AC 50 Hz
Voltage Detection Threshold	< 100 V AC
Control Circuit Frequency	50...60 Hz +/- 10 %
Output Contacts	1 C/O
Nominal Output Current	5 A
Measurement Voltage Limits	183…528 V AC
Delay At Power Up	650 ms
Voltage Range	183...528 V
Response Time	<= 130 ms (in the event of a fault)
Marking	CE
Overvoltage Category	III conforming to IEC 60664-1
Insulation Resistance	> 500 MOhm at 500 V DC conforming to IEC 60255-5 > 500 MOhm at 500 V DC conforming to IEC 60664-1

Disclaimer: This documentation is not intended as a substitute for and is not to be used for determining suitability or reliability of these products for specific user applications

[Ui] Rated Insulation Voltage	400 V conforming to IEC 60664-1
Supply Frequency	50/60 Hz +/- 10 %
Operating Position	Any position without derating
Connections - Terminals	Screw terminals, 1 x 0.5...1 x 4 mm² (AWG 20...AWG 11) solid without cable end Screw terminals, 2 x 0.5...2 x 2.5 mm² (AWG 20...AWG 14) solid without cable end Screw terminals, 1 x 0.2...1 x 2.5 mm² (AWG 24...AWG 12) flexible with cable end Screw terminals, 2 x 0.2...2 x 1.5 mm² (AWG 24...AWG 16) flexible with cable end
Tightening Torque	0.6…1 N.m conforming to IEC 60947-1
Housing Material	Self-extinguishing plastic
Local Signalling	LED (yellow) for relay ON
Mounting Support	35 mm symmetrical DIN rail conforming to IEC 60715
Electrical Durability	100000 cycles
Mechanical Durability	30000000 cycles
Operating Rate	<= 360 operations/hour full load
Utilisation Category	AC-12 conforming to IEC 60947-5-1 AC-13 conforming to IEC 60947-5-1 AC-14 conforming to IEC 60947-5-1 AC-15 conforming to IEC 60947-5-1 DC-12 conforming to IEC 60947-5-1 DC-13 conforming to IEC 60947-5-1
Safety Reliability Data	MTTFd = 924.6 years B10d = 850000
Width	17.5 mm
Net Weight	0.13 kg
Control Type	Without test button

Environment

Electromagnetic Compatibility	Emission standard for industrial environments conforming to IEC 61000-6-4 Emission standard for residential, commercial and light-industrial environments conforming to IEC 61000-6-3 Immunity for industrial environments conforming to IEC 61000-6-2
Standards	IEC 60255-1
Product Certifications	C-Tick GL CSA UL GOST
Directives	73/23/EEC - low voltage directive 89/336/EEC - electromagnetic compatibility
Ambient Air Temperature For Storage	-40…70 °C
Ambient Air Temperature For Operation	-20…50 °C
Relative Humidity	95 % at 55 °C conforming to IEC 60068-2-30
Vibration Resistance	0.35 mm (f= 5…57.6 Hz) conforming to IEC 60068-2-6 1 gn (f= 57.6…150 Hz) conforming to IEC 60255-21-1
Shock Resistance	15 gn for 11 ms conforming to IEC 60255-21-1
Ip Degree Of Protection	IP20 (terminals) conforming to IEC 60529 IP30 (casing) conforming to IEC 60529
Pollution Degree	3 conforming to IEC 60664-1
Dielectric Test Voltage	2 kV, 1 min AC 50 Hz
Non-Dissipating Shock Wave	4 kV

Packing Units

Unit Type Of Package 1	PCE
Number Of Units In Package 1	1
Package 1 Height	2.700 cm
Package 1 Width	7.800 cm
Package 1 Length	9.500 cm
Package 1 Weight	89.000 g
Unit Type Of Package 2	S02
Number Of Units In Package 2	48
Package 2 Height	15.000 cm
Package 2 Width	30.000 cm
Package 2 Length	40.000 cm
Package 2 Weight	4.715 kg
Unit Type Of Package 3	P06
Number Of Units In Package 3	768
Package 3 Height	75.000 cm
Package 3 Width	60.000 cm
Package 3 Length	80.000 cm
Package 3 Weight	81.828 kg

Contractual warranty

Warranty	12 months

Sustainability

Green Premium™ label is Schneider Electric's commitment to delivering products with best-in-class environmental performance. Green Premium promises compliance with the latest regulations, transparency on environmental impacts, as well as circular and low-CO_2 products.

Guide to assessing product sustainability is a white paper that clarifies global eco-label standards and how to interpret environmental declarations.

Learn more about Green Premium >

Guide to assess a product's sustainability >

Transparency RoHS/REACh

Well-being performance

Mercury Free

Rohs Exemption Information	Yes

Certifications & Standards

Reach Regulation	REACh Declaration
Eu Rohs Directive	Pro-active compliance (Product out of EU RoHS legal scope)
China Rohs Regulation	China RoHS declaration
Environmental Disclosure	Product Environmental Profile
Circularity Profile	End of Life Information

Dimensions Drawings

3-Phase Supply Control Relays

Dimensions and Mounting

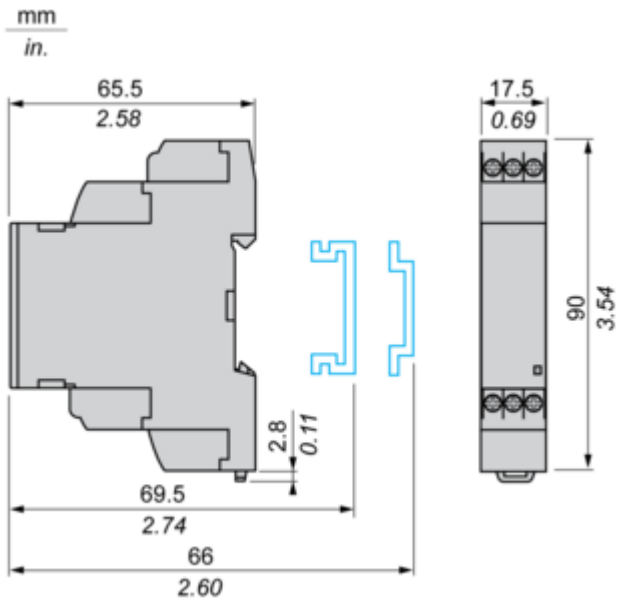

Connections and Schema

3-Phase Supply Control Relays

Wiring Diagram

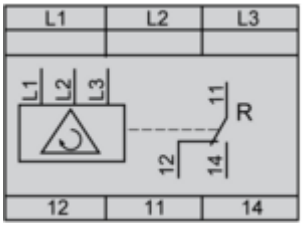

Application Scheme

Example

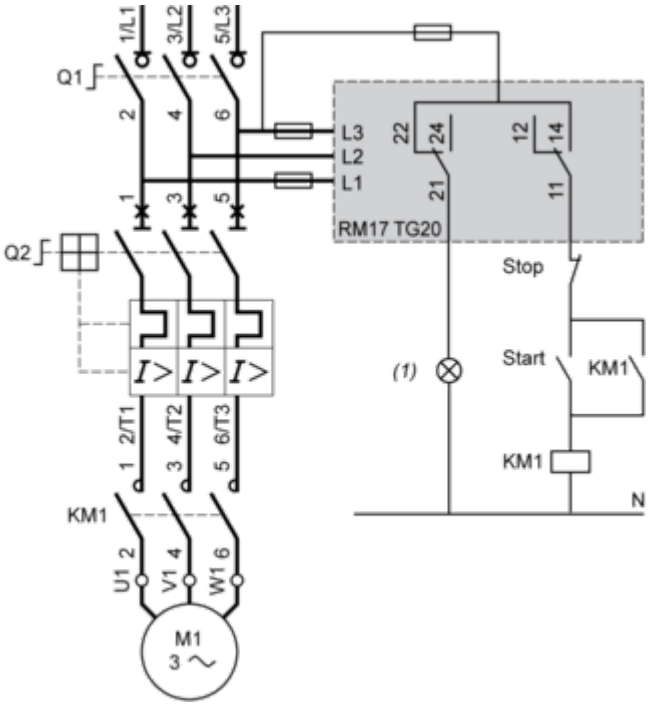

(1) Fault

Technical Description

Function Diagram

Phase Sequence Control and Total Loss of Phase Detection

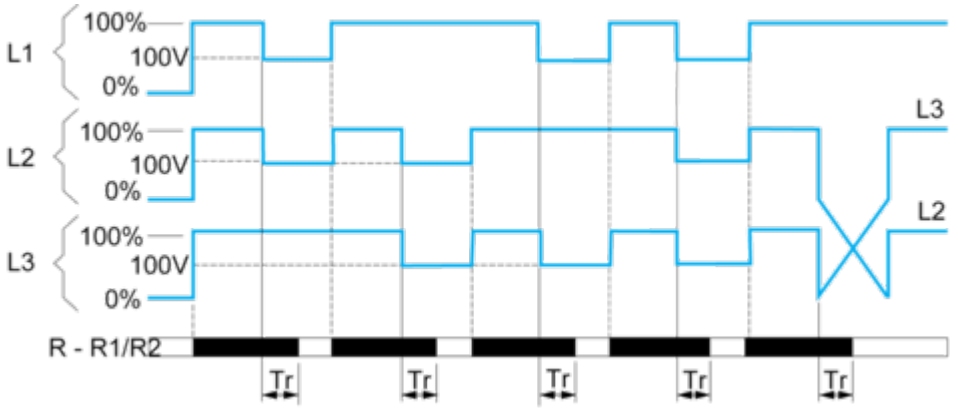

Legend

Tr Response time on appearance of a fault
L1, L2, L3 Phases of the supply voltage monitored
R - R1/R2 Output relay(s),
Relay status: black color = energized.