Product datasheet

Specifications

Green Premium™

solid state relay - DIN rail mount - input 4-32Vdc, output 24-280Vac, 20A

SSM1A120BD

Discontinued on: Oct 31, 2022

To be discontinued

Price: 1,499,300.00 IDR

Main

Range Of Product	Harmony Solid State Relays
Product Or Component Type	Solid state relay up to 20 A
Device Short Name	SSM1
Number Of Phases	1 phase
Output Switching Mode	Zero voltage switching

Complementary

Mounting Support	Symmetrical DIN rail
[In] Rated Current	20 A
Output Voltage	24...280 V AC
[Uc] Control Circuit Voltage	4...32 V DC
Tightening Torque	0.6...0.7 N.m for input 1.36...1.7 N.m for output
Connections - Terminals	Screw terminals: 1 x 0.2...1 x 5.3 mm², (AWG 24...AWG 10) for input Screw terminals: 1 x 0.2...1 x 5.3 mm², (AWG 24...AWG 10) for output
Maximum Capacitance	8 pF for input/output
Insulation Resistance	1000 MOhm at 500 V DC
Local Signalling	LED (green) for input status
Switching Voltage	4 V DC turn-on 1 V DC turn-off
Input Current	8…12 mA
Solid State Output Type	SCR output Zero voltage switching
Load Current	0.15…20 A
Transient Overvoltage	600 V
Surge Current	250 A for 16.6 ms
Maximum Voltage Drop	<1.6 V on-state
Maximum I²T For Fusing	260 A².s for 8.3 ms
Maximum Leakage Current	10 mA off-state
Dv/Dt	500 V/µs off-state at maximum voltage
Response Time	0.5 cycle (turn-on) 0.5 cycle (turn-off)

Disclaimer: This documentation is not intended as a substitute for and is not to be used for determining suitability or reliability of these products for specific user applications

Overvoltage Category	III
Net Weight	0.28 kg

Environment

Dielectric Strength	4 kV AC for input/output 4 kV AC for input or output to case
Pollution Degree	2
Standards	CSA C22.2 No 14 IEC 60950-1 UL 508
Product Certifications	EAC UL CSA
Marking	CSA UL CE EAC
Ip Degree Of Protection	IP20
Ambient Air Temperature For Operation	-40…80 °C
Ambient Air Temperature For Storage	-40…125 °C

Packing Units

Unit Type Of Package 1	PCE
Number Of Units In Package 1	1
Package 1 Height	3.2 cm
Package 1 Width	11.0 cm
Package 1 Length	11.0 cm
Package 1 Weight	293.0 g
Unit Type Of Package 2	S02
Number Of Units In Package 2	24
Package 2 Height	15.0 cm
Package 2 Width	30.0 cm
Package 2 Length	40.0 cm
Package 2 Weight	7.3 kg

Sustainability

Green Premium™ label is Schneider Electric's commitment to delivering products with best-in-class environmental performance. Green Premium promises compliance with the latest regulations, transparency on environmental impacts, as well as circular and low-CO_2 products.

Guide to assessing product sustainability is a white paper that clarifies global eco-label standards and how to interpret environmental declarations.

Learn more about Green Premium >

Guide to assess a product's sustainability >

Transparency RoHS/REACh

Well-being performance

Mercury Free

Rohs Exemption Information	Yes

Certifications & Standards

Reach Regulation	REACh Declaration
Eu Rohs Directive	Pro-active compliance (Product out of EU RoHS legal scope)
China Rohs Regulation	China RoHS declaration
Environmental Disclosure	Product Environmental Profile
Circularity Profile	End of Life Information

Dimensions Drawings

Dimensions

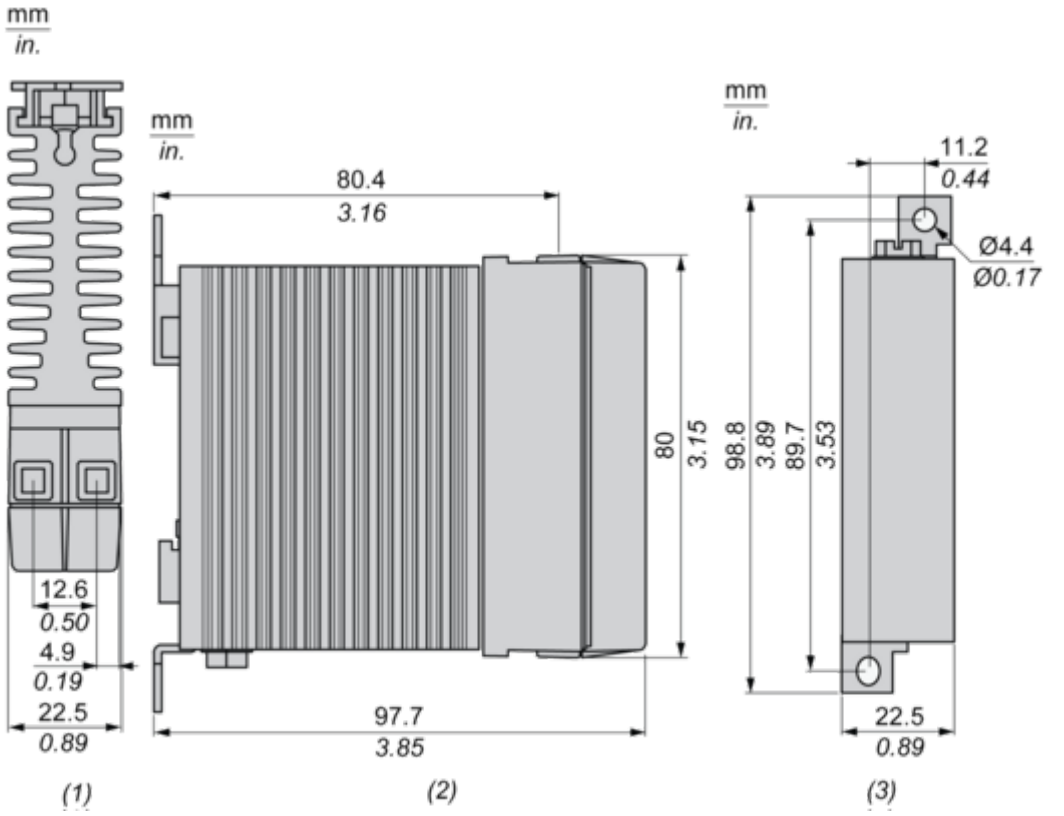

(1) Top view
(2) Side view
(3) Front view

Performance Curves

Derating Curves

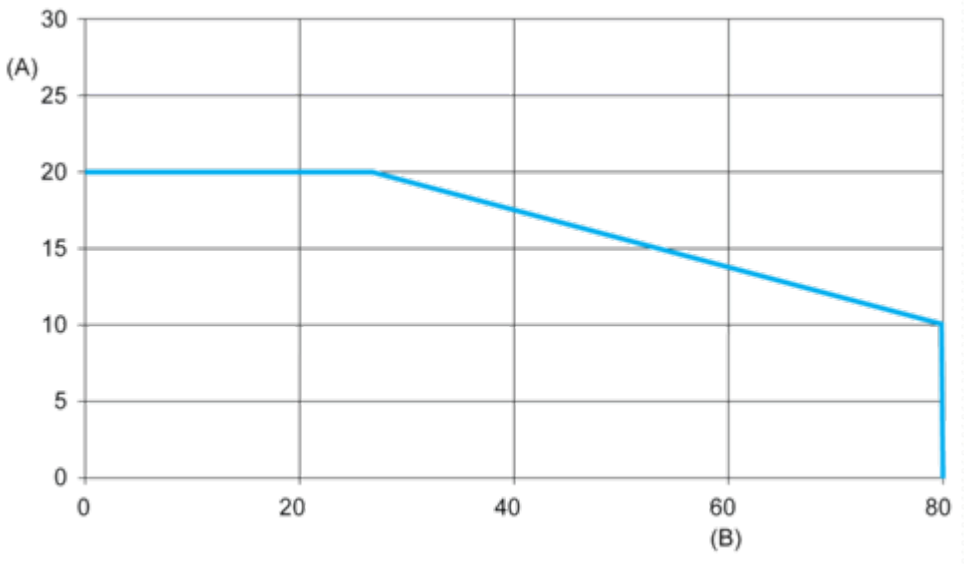

A : Load Current (Amperes)
B : Ambient Temperature (°C)