Product datasheet

Specifications

Green Premium™

empty control station - XAP-M - metal - 8 horizontal openings

XAPM5508

Discontinued on: Dec 31, 2021

End-of-service on: Jun 30, 2022

To be discontinued

Main

Range Of Product	Harmony XAP
Product Or Component Type	Die-cast empty control station
Device Short Name	XAPM
Product Destination	For Ø 22 mm control and signalling units
Product Front Plate Size	85 x 310 mm
Usable Depth	74.5 mm
Number Of Cut-Out	8 cut-outs
Colour Of Base Of Enclosure	Blue
Colour Of Cover	Blue
Material	Aluminium alloy
Cable Entry	1 hole without blanking plug for cable gland, clamping capacity: 24 mm
Ip Degree Of Protection	IP65 conforming to IEC 60529

Complementary

Number Of Vertical Rows	1
Net Weight	0.81 kg

Environment

Protective Treatment	TC
Ambient Air Temperature For Storage	-40…70 °C
Ambient Air Temperature For Operation	-40…70 °C

Packing Units

Unit Type Of Package 1	PCE
Number Of Units In Package 1	1
Package 1 Height	12 cm
Package 1 Width	9 cm
Package 1 Length	31.5 cm
Package 1 Weight	940 g

Contractual warranty

Disclaimer: This documentation is not intended as a substitute for and is not to be used for determining suitability or reliability of these products for specific user applications

Warranty	12 months

Sustainability

Green Premium™ label is Schneider Electric's commitment to delivering products with best-in-class environmental performance. Green Premium promises compliance with the latest regulations, transparency on environmental impacts, as well as circular and low-CO_2 products.

Guide to assessing product sustainability is a white paper that clarifies global eco-label standards and how to interpret environmental declarations.

Learn more about Green Premium >

Guide to assess a product's sustainability >

Transparency RoHS/REACh

Well-being performance

Reach Free Of Svhc	
Toxic Heavy Metal Free	
Mercury Free	
Rohs Exemption Information	Yes

Certifications & Standards

Reach Regulation	REACh Declaration
Eu Rohs Directive	Pro-active compliance (Product out of EU RoHS legal scope) EU RoHS Declaration
China Rohs Regulation	China RoHS declaration
Environmental Disclosure	Product Environmental Profile
Circularity Profile	No need of specific recycling operations

Dimensions Drawings

Dimensions and Fixing

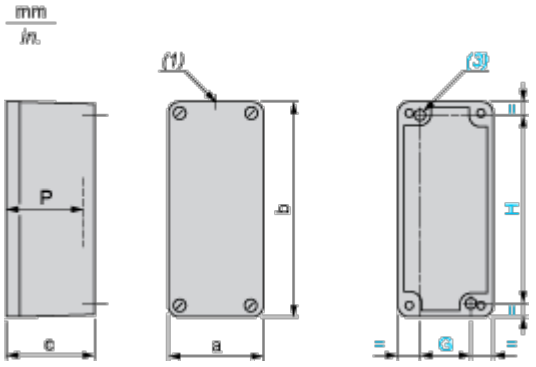

(1) 1 hole, without blanking plug, for cable gland with 24 mm/0.94 in. maximum clamping capacity

(3) 2 x Ø 5.6 mm/0.22 in. holes, depth 20 mm/0.78 in.

P Usable depth

a		b		c		G		H		P	
mm	in.	mm	in.	mm	in.	mm	in.	mm	in.	mm	in.
85	3.35	310	12.20	77	3.03	55	2.17	295	11.61	74.5	2.93

Refer to the product characteristics to get the number of cut-outs.

Cut-out interaxis dimensions

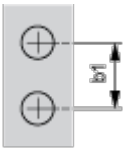

b1 Vertical interaxis: 30 mm/1.18 in.