Product datasheet

Specifications

Green Premium™

module XPS-MP - 2 independent functions - 24 V DC

XPSMP11123

Discontinued on: Aug 27, 2020

To be end-of-service on: Dec 31, 2025

Discontinued

Main

Range Of Product	Preventa Safety automation
Product Or Component Type	Safety controller with pre-defined function
Safety Module Name	XPSMP
Safety Module Application	2 independent functions
Safety Use Category	Category 4 maximum conforming to EN/IEC 60954-1
Type Of Start	Automatic or unmonitored (configuration 1) Automatic or unmonitored (configuration 10) Automatic or unmonitored (configuration 11) Automatic or unmonitored (configuration 14) Automatic or unmonitored (configuration 3) Automatic or unmonitored (configuration 5) Automatic or unmonitored (configuration 7) Monitored (configuration 12) Monitored (configuration 13) Monitored (configuration 15) Monitored (configuration 2) Monitored (configuration 4) Monitored (configuration 6) Monitored (configuration 8) Monitored (configuration 9)
Checks	Configuration (configuration 10) Configuration (configuration 13) Configuration (configuration 3) Configuration (configuration 4) Configuration (configuration 5) Configuration (configuration 6) Configuration (configuration 9)
Standards	EN/IEC 60947-1 + A11 EN/IEC 60947-5-1 EN/IEC 60204-1 DIN V VDE 801 + A1
Product Certifications	UL CSA BIA
[Us] Rated Supply Voltage	24 V DC - 20...20 %

Disclaimer: This documentation is not intended as a substitute for and is not to be used for determining suitability or reliability of these products for specific user applications

Connections - Terminals	Captive screw clamp terminals flexible cable: 0.14...0.75 mm² without cable end, 2 wires Captive screw clamp terminals solid cable: 0.14...0.75 mm² without cable end, 2 wires Captive screw clamp terminals flexible cable: 0.14...2.5 mm² without cable end, 1 wire Captive screw clamp terminals solid cable: 0.14...2.5 mm² without cable end, 1 wire Captive screw clamp terminals flexible cable: 0.25...1 mm² with cable end, without bezel, 2 wires Captive screw clamp terminals flexible cable: 0.25...1.5 mm² with cable end, with bezel, 1 wire Captive screw clamp terminals flexible cable: 0.25...2.5 mm² with cable end, without bezel, 1 wire Captive screw clamp terminals flexible cable: 0.5...1.5 mm² with cable end, with double bezel, 2 wires
Safety Level	Can reach PL e/category 4 conforming to EN/ISO 13849-1 Can reach SIL 3 conforming to EN/IEC 62061

Complementary

Function Of Module	Configuration 0: functions disabled (factory setting) Configuration 1: emergency stop monitoring 1-channel wiring, category 2 Configuration 10: enabling grip switch monitoring (3-position switch), category 4 Configuration 11: sensing mat and edges monitoring, category 3 Configuration 12: sensing mat and edges monitoring, category 3 Configuration 13: relay output safety light curtain monitoring, category 4 Configuration 14: coded magnetic switch monitoring, category 4 Configuration 15: coded magnetic switch monitoring, category 4 Configuration 2: emergency stop monitoring 1-channel wiring, category 2 Configuration 3: emergency stop monitoring 2-channel wiring, or guard monitoring, category 4 Configuration 4: emergency stop monitoring 2-channel wiring, or guard monitoring, category 4 Configuration 5: emergency stop monitoring 2-channel wiring, or guard monitoring, category 4 Configuration 6: emergency stop monitoring 2-channel wiring, or guard monitoring, category 4 Configuration 7: emergency stop monitoring 2-channel wiring, or guard monitoring, category 4 Configuration 8: emergency stop monitoring 2-channel wiring, or guard monitoring, category 4 Configuration 9: guard monitoring for injection presses and blowing machines, category 4
Synchronisation Time Between Inputs	0.5 s (configuration 13) 1.5 s (configuration 14) 1.5 s (configuration 15) 1.5 s (configuration 5) 1.5 s (configuration 6) 1.5 s (configuration 9) Unlimited (configuration 3) Unlimited (configuration 4) Unlimited (configuration 7) Unlimited (configuration 8)
Power Consumption In W	5 W
Input Protection Type	Internal, electronic
[Uc] Control Circuit Voltage	24 V
Maximum Line Resistance	100 Ohm <2000 m
Number Of Safety Circuits	3 NO relays per function (6 NO total), volt-free
Number Of Additional Circuits	3 solid state outputs
Breaking Capacity	180 VA holding AC-15 C300 relay output 1800 VA inrush AC-15 C300 relay output
Breaking Capacity	20 mA at 24 V for static output circuit 1.5 A at 24 V (DC-13) time constant: 50 ms for relay output
Output Thermal Current	2 A for 1 output and 4 A for the other 2 outputs for relay 3.3 A for all 3 outputs relay simultaneously 6 A for 1 output and 2 A for the other 2 outputs for relay

[Ith] Conventional Free Air Thermal Current	20 A
Associated Fuse Rating	4 A gG for relay output conforming to EN/IEC 60947-5-1, DIN VDE 0660 part 200 6 A fast blow for relay output conforming to EN/IEC 60947-5-1, DIN VDE 0660 part 200
Minimum Output Current	10 mA for relay output
Minimum Output Voltage	17 V for relay output
Maximum Response Time On Input Open	30 ms
[Ui] Rated Insulation Voltage	300 V (pollution degree 2) conforming to EN/IEC 60947-5-1, DIN VDE 0110 parts 1 & 2
[Uimp] Rated Impulse Withstand Voltage	4 kV overvoltage category III conforming to EN/IEC 60947-5-1, DIN VDE 0110 parts 1 & 2
Local Signalling	12 LEDs
Mounting Support	35 mm symmetrical DIN rail
Depth	114 mm
Height	99 mm
Width	45 mm
Net Weight	0.32 kg

Environment

Ip Degree Of Protection	IP20 (terminals) IP40 (enclosure)
Ambient Air Temperature For Operation	-10…55 °C
Ambient Air Temperature For Storage	-25…85 °C

Packing Units

Unit Type Of Package 1	PCE
Number Of Units In Package 1	1
Package 1 Height	6.5 cm
Package 1 Width	12 cm
Package 1 Length	16 cm
Package 1 Weight	452 g
Unit Type Of Package 2	S03
Number Of Units In Package 2	20
Package 2 Height	30 cm
Package 2 Width	30 cm
Package 2 Length	40 cm
Package 2 Weight	9.762 kg

Contractual warranty

Warranty	18 months

Sustainability

Green Premium™ label is Schneider Electric's commitment to delivering products with best-in-class environmental performance. Green Premium promises compliance with the latest regulations, transparency on environmental impacts, as well as circular and low-CO_2 products.

Guide to assessing product sustainability is a white paper that clarifies global eco-label standards and how to interpret environmental declarations.

Learn more about Green Premium >

Guide to assess a product's sustainability >

Transparency RoHS/REACh

Well-being performance

Mercury Free	
Rohs Exemption Information	Yes
Pvc Free	

Certifications & Standards

Reach Regulation	REACh Declaration
Eu Rohs Directive	Pro-active compliance (Product out of EU RoHS legal scope)
China Rohs Regulation	China RoHS declaration
Environmental Disclosure	Product Environmental Profile
Weee	The product must be disposed on European Union markets following specific waste collection and never end up in rubbish bins
Circularity Profile	End of Life Information

Dimensions Drawings

Dimensions

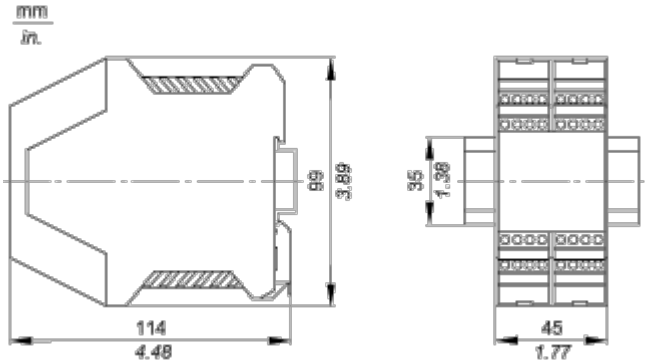

Connections and Schema

Wiring Diagrams

Refer to the Instruction Sheet

To download the instruction sheet, follow below procedure:

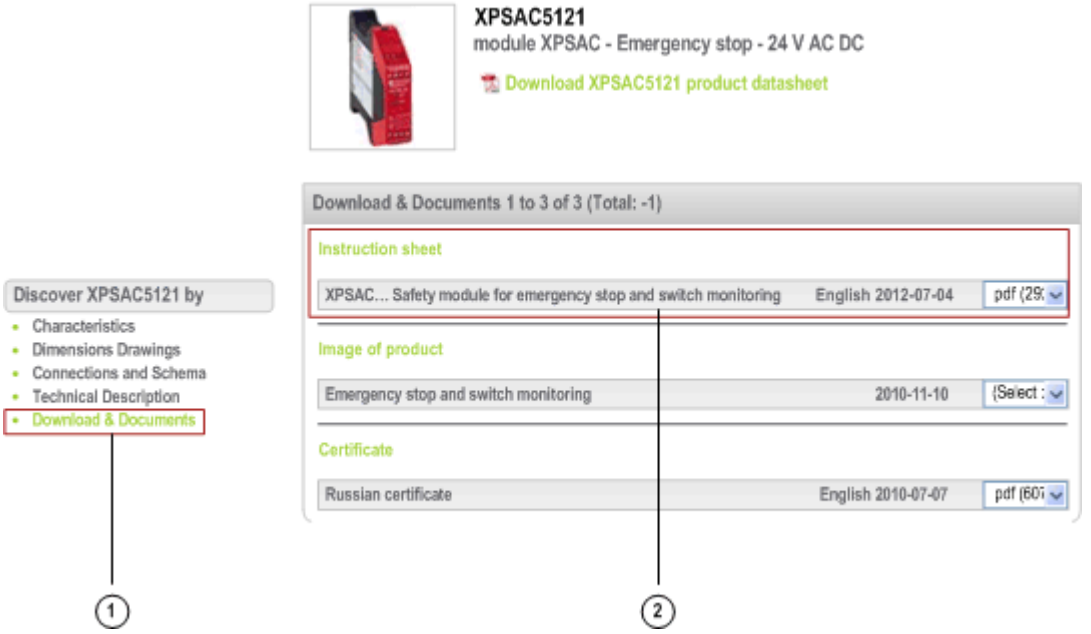

1 Click on **Download & Documents.**

2 Click on **Instruction sheet.**

Technical Description

Safety Functions

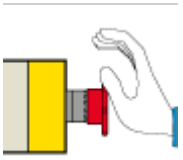	• Emergency stop monitoring, 1 channel wiring:
	  ○ 1 channel Emergency stop, automatic or unmonitored start.
	  ○ 1 channel Emergency stop, monitored start.
	• Emergency stop monitoring, 2 channel wiring:
	  ○ 2 channel Emergency stop, automatic or unmonitored start.
	  ○ 2 channel Emergency stop, monitored start.

	• Coded magnetic switch monitoring:
	  ○ Automatic or unmonitored start, synchronization time = 1,5 s.
	  ○ Monitored start, synchronization time = 1,5 s.

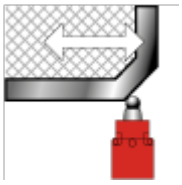	• Guard monitoring with start test:
	  ○ Locking of guard with start test, automatic or unmonitored start.
	  ○ Locking of guard with start test, monitored start.
	• Guard monitoring with start test and synchronization time = 1,5 ms:
	  ○ Locking of guard with start test, automatic or unmonitored start.
	  ○ Locking of guard with start test, monitored start.
	• Guard monitoring for injection press or blowing machine.

	• Enabling switch monitoring, safety mat monitoring:
	  ○ Enabling switch monitoring, with or without start-up preparation.
	  ○ Safety mat monitoring, automatic or unmonitored start.

	• Sensing mat monitoring, monitored start.

	• Light curtain monitoring, monitored start, synchronization time = 0,5 s.