Product datasheet

Specifications

Green Premium™

Push-button head, Harmony 9001SK, plastic, recessed, 7 colours choice, 30mm, spring return

9001SKR2U

Main

Range Of Product	Harmony 9001SK
Product Or Component Type	Head for push-button
Device Short Name	9001SK
Operator Profile	recessed, unmarked
Operator Additional Information	Plastic guard

Complementary

Mounting Diameter	30 mm
Shape Of Signaling Unit Head	Round
Type Of Operator	spring return
Net Weight	0.05 kg
Bezel Material	Plastic
Cap/Operator Or Lens Colour	7 colours choice
Operator Profile	Recessed
Type Of Operator	Spring return
Contacts Type And Composition	Without contact block

Packing Units

Unit Type Of Package 1	PCE
Number Of Units In Package 1	1
Package 1 Height	5.08 cm
Package 1 Width	5.842 cm
Package 1 Length	7.366 cm
Package 1 Weight	49.895 g

Contractual warranty

Warranty	18 months

Disclaimer: This documentation is not intended as a substitute for and is not to be used for determining suitability or reliability of these products for specific user applications

Sustainability

Green Premium™ label is Schneider Electric's commitment to delivering products with best-in-class environmental performance. Green Premium promises compliance with the latest regulations, transparency on environmental impacts, as well as circular and low-CO_2 products.

Guide to assessing product sustainability is a white paper that clarifies global eco-label standards and how to interpret environmental declarations.

Learn more about Green Premium >

Guide to assess a product's sustainability >

Transparency RoHS/REACh

Well-being performance

Reach Free Of Svhc	
Toxic Heavy Metal Free	
Mercury Free	
Rohs Exemption Information	Yes

Certifications & Standards

Reach Regulation	REACh Declaration
Eu Rohs Directive	Pro-active compliance (Product out of EU RoHS legal scope) EU RoHS Declaration
China Rohs Regulation	China RoHS declaration
Environmental Disclosure	Product Environmental Profile
Weee	The product must be disposed on European Union markets following specific waste collection and never end up in rubbish bins
Circularity Profile	No need of specific recycling operations

Dimensions Drawings

Dimensions

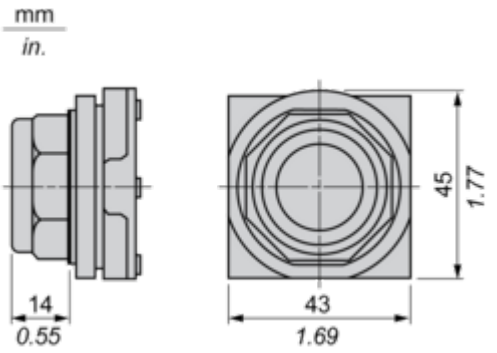

Mounting and Clearance

Contact Block Mounting Position

Top and Rear views

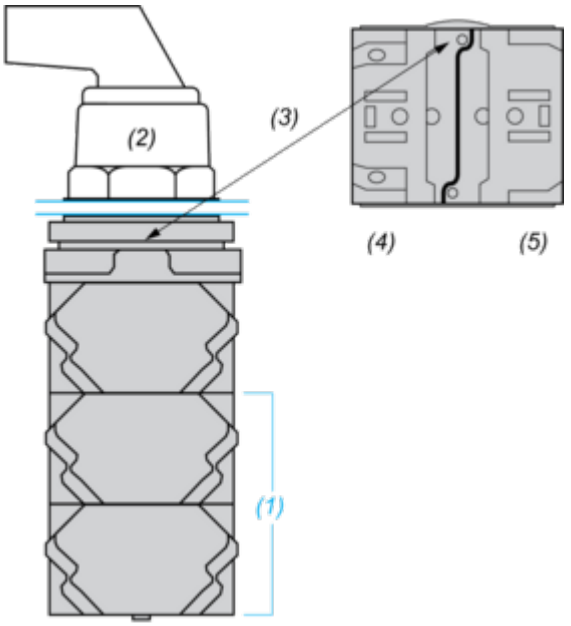

(1) It is possible to mount up to 3 levels of contacts blocks (maximum of 6 contacts blocks)
(2) Operator
(3) Locating notch
(4) Side 1
(5) Side 2