Product datasheet

Specifications

Green Premium™

To be discontinued

battery control module, phaseo ABL7 ABL8, 24 to 28.8V DC, phaseo ABL7 ABL8, 24V, 40A, for regulated SMPS

ABL8BBU24400

To be discontinued on: 31 Dec 2024

Main

Range Of Product	Phaseo
Product Or Component Type	Battery control module
Input Voltage	24...28.8 V DC
Output Voltage	(Ubattery-0.5) V in battery mode DC (Uin-0.25) V in nominal mode DC
Maximum Output Current	40 A

Complementary

Input Voltage Limits	22...30 V
Maximum Power Dissipation In W	12 W
Activation Threshold	Adjustable 22...36 V
Number Of Output Channels	1
Current Consumption	0.6 A on load 0.1 mA no load <= 40.6 A
Output Protection Type	Against overload, protection technology: 1.5 x In Against short-circuits, protection technology: battery-backed mode, automatic reset Against short-circuits, protection technology: power-supplied mode
Connections - Terminals	For diagnostic relay: removable screw terminal block, connection capacity: 1 x 0.75 mm² For input connection: screw type terminals, connection capacity: 2 x 0.5...2 x 10 mm² AWG 20...AWG 8 For output connection: screw type terminals, connection capacity: 2 x 0.5...2 x 10 mm² AWG 20...AWG 8
Fixing Mode	By clips on 35 mm symmetrical DIN rail, operating position: horizontal By clips on 35 mm symmetrical DIN rail, operating position: vertical
Marking	CE
Name Of Test	Electrostatic discharges conforming to IEC 61000-4-2 Emission conforming to IEC 61000-6-3 Induced electromagnetic field conforming to IEC 61000-4-6 level 3 Radiated electromagnetic field conforming to IEC 61000-4-3 level 3 Rapid transient conforming to IEC 61000-4-4 level 3 Surge conforming to IEC 61000-4-5 level 2 Conducted/radiated emissions conforming to EN 55022 class B, 20 %
Local Signalling	1 C/O relay for alarm status 1 C/O relay for battery status 1 C/O relay for power supply status LCD screen for module status
Net Weight	0.7 kg

Disclaimer: This documentation is not intended as a substitute for and is not to be used for determining suitability or reliability of these products for specific user applications

Environment

Product Certifications	RCM EAC
Standards	UL 508 CSA C22.2 No 60950-1
Ambient Air Temperature For Operation	-25…60 °C
Ambient Air Temperature For Storage	-40…85 °C
Environmental Characteristic	EMC conforming to IEC 61000-6-3 EMC conforming to IEC 61000-6-2 Safety conforming to IEC 60950-1 Safety conforming to EN/IEC 61204-3
Ip Degree Of Protection	IP20 conforming to IEC 60529
Dielectric Strength	500 V between input and ground 500 V between output and ground
Overvoltage Category	Class II conforming to VDE 0106-1
Relative Humidity	0…90 % during operation 0…95 % during storage
Mtbf Reliability	707945 H at 24 V DC with UTE C80-810 calculation method
Vibration Resistance	2 gn (f= 11.9…150 Hz) conforming to IEC 61131-2 3.5 mm (f= 3…11.9 Hz) conforming to IEC 61131-2

Packing Units

Unit Type Of Package 1	PCE
Number Of Units In Package 1	1
Package 1 Height	11.2 cm
Package 1 Width	18 cm
Package 1 Length	18.5 cm
Package 1 Weight	1.349 kg
Unit Type Of Package 2	S04
Number Of Units In Package 2	8
Package 2 Height	30 cm
Package 2 Width	40 cm
Package 2 Length	60 cm
Package 2 Weight	12.11 kg

Contractual warranty

Warranty	18 months

Sustainability

Green Premium™ label is Schneider Electric's commitment to delivering products with best-in-class environmental performance. Green Premium promises compliance with the latest regulations, transparency on environmental impacts, as well as circular and low-CO_2 products.

Guide to assessing product sustainability is a white paper that clarifies global eco-label standards and how to interpret environmental declarations.

Learn more about Green Premium >

Guide to assess a product's sustainability >

Transparency RoHS/REACh

Well-being performance

Mercury Free	
Rohs Exemption Information	Yes
Pvc Free	

Certifications & Standards

Reach Regulation	REACh Declaration
Eu Rohs Directive	Pro-active compliance (Product out of EU RoHS legal scope)
China Rohs Regulation	China RoHS declaration
Environmental Disclosure	Product Environmental Profile
Circularity Profile	End of Life Information

Dimensions Drawings

24 Vdc/40 A Battery Control Module

Dimensions

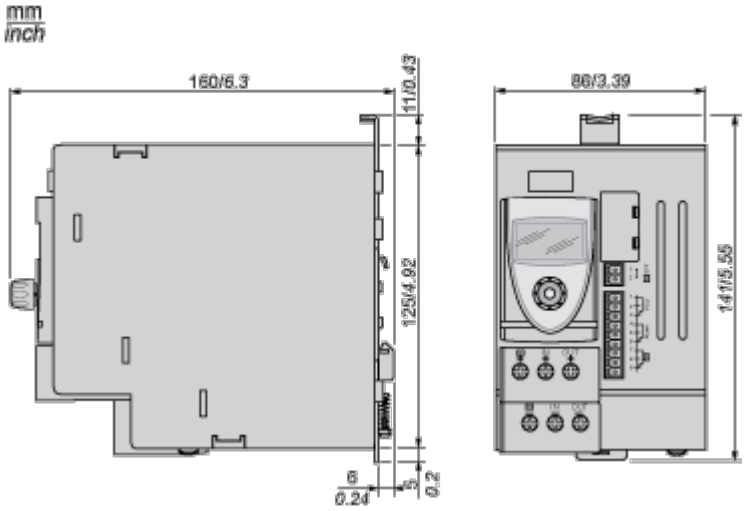

Mounting and Clearance

24 Vdc Battery Control Module

Mounting

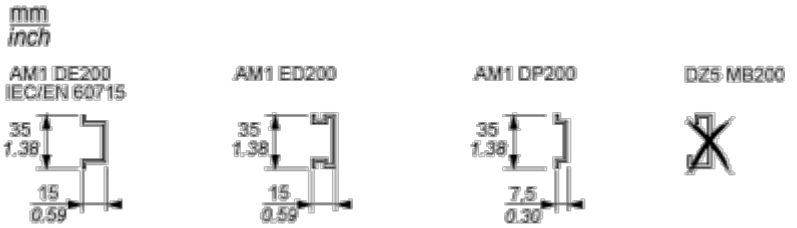

24 Vdc Battery Control Module

Clearance

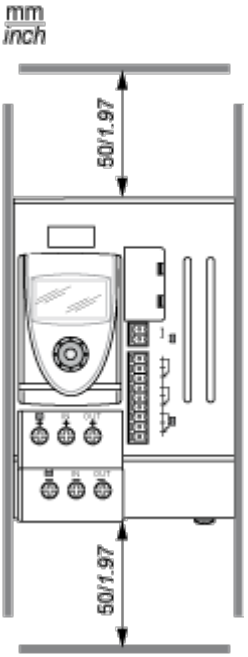

Connections and Schema

24 Vdc Battery Control Module

Wiring Diagram

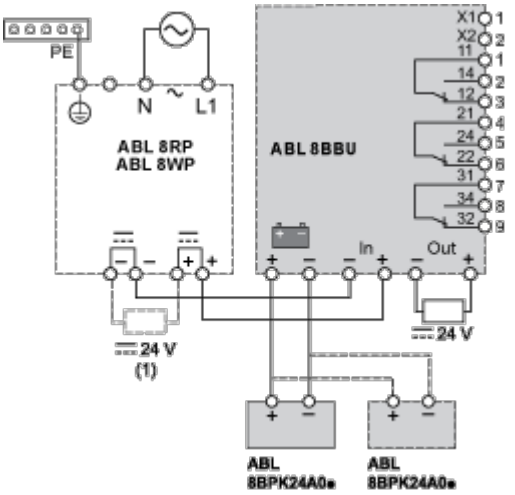

(1) See table below for the maximum unstored charge capacity (µF)

ABL	Max. Unstored Charge Capacity (uF)
8RPS24030	30 000
8RPS24050	50 000
8RPS24100	100 000
8RPM24200	100 000
8WPS24200	100 000
8WPS24400	100 000

24 Vdc Battery Control Module

Outputs States (U = 24 Vdc: I > 5 mA, U = 230 Vac: I < 500 mA)

	No power from the power supply		Power from the power supply
	Alarm or device not supplied		No alarm
	No power from the battery pack		Power from the battery pack

Inputs States (Dry Contact)

	Operational battery	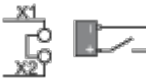	Battery inhibited

Wiring Requirements

Cable Types and Wire Sizes

IEC / EN

10 mm, Ø ≤ 4 mm² / 17 mm, Ø > 4 mm²		ABL 8RPS24030 8RPS24050 8RPS24100	ABL 8RPM24200 8WPS24200 8WPS24400
ABL 8BBU24200	In + / –	1...4 mm²	4... 10 mm²
	+ / –	6 mm²	–
	Out + / –	6 mm²	–
ABL 8BBU24400	In + / –	1...4 mm²	4... 10 mm²
	+ / –	10 mm²	–
	Out + / –	10 mm²	–
	⊖ ⏚	10 mm²	
6,35 mm		–	
OFF / PSU / Alarm /		0,14...1 mm²	

UL

0.39 in., Ø ≤ 12 AWG / 0.67 in., Ø > 12 AWG		ABL 8RPS24030 8RPS24050 8RPS24100	ABL 8RPM24200 8WPS24200 8WPS24400
ABL 8BBU24200	In + / –	16... 12 AWG	12...6 AWG
	+ / –	10 AWG	–
	Out + / –	10 AWG	–
ABL 8BBU24400	In + / –	16... 12 AWG	12...6 AWG
	+ / –	6 AWG	–
	Out + / –	6 AWG	–
	⊖ ⏚	6 AWG	
0.25 in.		–	
OFF / PSU / Alarm /		26... 16 AWG	