Product datasheet

Specifications

Green Premium™

variable speed drive, Altivar Process ATV600, ATV630, 1.5kW, 2hp, 200 to 240V, IP21, UL type 1

ATV630U15M3

Main

Range Of Product	Altivar Process ATV600
Product Or Component Type	Variable speed drive
Product Specific Application	Process and utilities
Device Short Name	ATV630
Variant	Standard version
Product Destination	Asynchronous motors Synchronous motors
Emc Filter	Without EMC filter
Ip Degree Of Protection	IP21 conforming to IEC 61800-5-1 IP21 conforming to IEC 60529
[Us] Rated Supply Voltage	200...240 V
Degree Of Protection	UL type 1 conforming to UL 508C
Type Of Cooling	Forced convection
Supply Frequency	50...60 Hz - 5...5 %
[Us] Rated Supply Voltage	200...240 V - 15...10 %
Motor Power Kw	1.5 kW (normal duty) 0.75 kW (heavy duty)
Motor Power Hp	2 hp normal duty 1 hp heavy duty
Line Current	5.9 A at 200 V (normal duty) 5 A at 240 V (normal duty) 3.3 A at 200 V (heavy duty) 3 A at 240 V (heavy duty)
Prospective Line Isc	50 kA
Apparent Power	2.1 kVA at 240 V (normal duty) 1.2 kVA at 240 V (heavy duty)
Continuous Output Current	8 A at 4 kHz for normal duty 4.6 A at 4 kHz for heavy duty
Asynchronous Motor Control Profile	Constant torque standard Variable torque standard Optimized torque mode
Synchronous Motor Control Profile	Permanent magnet motor Synchronous reluctance motor
Speed Drive Output Frequency	0.1…500 Hz
Nominal Switching Frequency	4 kHz
Switching Frequency	2...12 kHz adjustable 4...12 kHz with derating factor

Disclaimer: This documentation is not intended as a substitute for and is not to be used for determining suitability or reliability of these products for specific user applications

Safety Function	STO (safe torque off) SIL 3
Discrete Input Logic	16 preset speeds
Communication Port Protocol	Modbus serial Ethernet Modbus TCP
Option Card	Slot A: communication module, Profibus DP V1 Slot A: communication module, PROFINET Slot A: communication module, DeviceNet Slot A: communication module, Modbus TCP/EtherNet/IP Slot A: communication module, CANopen daisy chain RJ45 Slot A: communication module, CANopen SUB-D 9 Slot A: communication module, CANopen screw terminals Slot A/slot B: digital and analog I/O extension module Slot A/slot B: output relay extension module Slot A: communication module, Ethernet IP/Modbus TCP/MD-Link Communication module, BACnet MS/TP Communication module, Ethernet Powerlink

Complementary

Mounting Mode	Wall mount
Maximum Transient Current	8.8 A during 60 s (normal duty) 6.9 A during 60 s (heavy duty)
Network Number Of Phases	3 phases
Discrete Output Number	0
Discrete Output Type	Relay outputs R1A, R1B, R1C 250 V AC 3000 mA Relay outputs R1A, R1B, R1C 30 V DC 3000 mA Relay outputs R2A, R2C 250 V AC 5000 mA Relay outputs R2A, R2C 30 V DC 5000 mA Relay outputs R3A, R3C 250 V AC 5000 mA Relay outputs R3A, R3C 30 V DC 5000 mA
Output Voltage	<= power supply voltage
Permissible Temporary Current Boost	1.1 x In during 60 s (normal duty) 1.5 x In during 60 s (heavy duty)
Motor Slip Compensation	Automatic whatever the load Can be suppressed Adjustable Not available in permanent magnet motor law
Acceleration And Deceleration Ramps	Linear adjustable separately from 0.01...9999 s
Physical Interface	Ethernet 2-wire RS 485
Braking To Standstill	By DC injection
Protection Type	Thermal protection: motor Safe torque off: motor Motor phase break: motor Thermal protection: drive Safe torque off: drive Overheating: drive Overcurrent between output phases and earth: drive Overload of output voltage: drive Short-circuit protection: drive Motor phase break: drive Overvoltages on the DC bus: drive Line supply overvoltage: drive Line supply undervoltage: drive Line supply phase loss: drive Overspeed: drive Break on the control circuit: drive
Transmission Rate	10, 100 Mbits 4800 bps, 9600 bps, 19200 bps, 38.4 Kbps
Frequency Resolution	Display unit: 0.1 Hz Analog input: 0.012/50 Hz

Transmission Frame	RTU
Electrical Connection	Control: removable screw terminals 0.5...1.5 mm²/AWG 20...AWG 16 Motor: screw terminal 2.5...6 mm²/AWG 14...AWG 10 Line side: screw terminal 2.5...6 mm²/AWG 14...AWG 10
Connector Type	RJ45 (on the remote graphic terminal) for Ethernet/Modbus TCP RJ45 (on the remote graphic terminal) for Modbus serial
Data Format	8 bits, configurable odd, even or no parity
Type Of Polarization	No impedance
Exchange Mode	Half duplex, full duplex, autonegotiation Ethernet/Modbus TCP
Number Of Addresses	1…247 for Modbus serial
Method Of Access	Slave Modbus TCP
Supply	External supply for digital inputs: 24 V DC (19…30 V), <1.25 mA, protection type: overload and short-circuit protection Internal supply for reference potentiometer (1 to 10 kOhm): 10.5 V DC +/- 5 %, <10 mA, protection type: overload and short-circuit protection Internal supply for digital inputs and STO: 24 V DC (21…27 V), <200 mA, protection type: overload and short-circuit protection
Local Signalling	3 LEDs for local diagnostic 3 LEDs (dual colour) for embedded communication status 4 LEDs (dual colour) for communication module status 1 LED (red) for presence of voltage
Width	144 mm
Height	350 mm
Depth	203 mm
Net Weight	4.3 kg
Analogue Input Number	3
Analogue Input Type	AI1, AI2, AI3 software-configurable voltage: 0...10 V DC, impedance: 31.5 kOhm, resolution 12 bits AI1, AI2, AI3 software-configurable current: 0...20 mA, impedance: 250 Ohm, resolution 12 bits AI2 voltage analog input: - 10...10 V DC, impedance: 31.5 kOhm, resolution 12 bits
Discrete Input Number	8
Discrete Input Type	DI7, DI8 programmable as pulse input: 0…30 kHz, 24 V DC (<= 30 V)
Input Compatibility	DI1...DI6: discrete input level 1 PLC conforming to IEC 61131-2 DI5, DI6: discrete input level 1 PLC conforming to IEC 65A-68 STOA, STOB: discrete input level 1 PLC conforming to IEC 61131-2
Discrete Input Logic	Positive logic (source) (DI1...DI8), < 5 V (state 0), > 11 V (state 1) Negative logic (sink) (DI1...DI8), > 16 V (state 0), < 10 V (state 1)
Analogue Output Number	2
Analogue Output Type	Software-configurable voltage AQ1, AQ2: 0...10 V DC impedance 470 Ohm, resolution 10 bits Software-configurable current AQ1, AQ2: 0...20 mA, resolution 10 bits Software-configurable current DQ-, DQ+: 30 V DC Software-configurable current DQ-, DQ+: 100 mA
Sampling Duration	2 ms +/- 0.5 ms (DI1...DI4) - discrete input 5 ms +/- 1 ms (DI5, DI6) - discrete input 5 ms +/- 0.1 ms (AI1, AI2, AI3) - analog input 10 ms +/- 1 ms (AO1) - analog output
Accuracy	+/- 0.6 % AI1, AI2, AI3 for a temperature variation 60 °C analog input +/- 1 % AO1, AO2 for a temperature variation 60 °C analog output
Linearity Error	AI1, AI2, AI3: +/- 0.15 % of maximum value for analog input AO1, AO2: +/- 0.2 % for analog output
Relay Output Number	3

Relay Output Type	Configurable relay logic R1: fault relay NO/NC electrical durability 100000 cycles Configurable relay logic R2: sequence relay NO electrical durability 100000 cycles Configurable relay logic R3: sequence relay NO electrical durability 100000 cycles
Refresh Time	Relay output (R1, R2, R3): 5 ms (+/- 0.5 ms)
Minimum Switching Current	Relay output R1, R2, R3: 5 mA at 24 V DC
Maximum Switching Current	Relay output R1, R2, R3 on resistive load, cos phi = 1: 3 A at 250 V AC Relay output R1, R2, R3 on resistive load, cos phi = 1: 3 A at 30 V DC Relay output R1, R2, R3 on inductive load, cos phi = 0.4 and L/R = 7 ms: 2 A at 250 V AC Relay output R1, R2, R3 on inductive load, cos phi = 0.4 and L/R = 7 ms: 2 A at 30 V DC
Isolation	Between power and control terminals
Maximum Output Frequency	500 kHz
Maximum Input Current	5.9 A
Variable Speed Drive Application Selection	Building - HVAC compressor centrifugal Food and beverage processing other application Mining mineral and metal fan Mining mineral and metal pump Oil and gas fan Water and waste water other application Building - HVAC screw compressor Food and beverage processing pump Food and beverage processing fan Food and beverage processing atomization Oil and gas electro submersible pump (ESP) Oil and gas water injection pump Oil and gas jet fuel pump Oil and gas compressor for refinery Water and waste water centrifuge pump Water and waste water positive displacement pump Water and waste water electro submersible pump (ESP) Water and waste water screw pump Water and waste water lobe compressor Water and waste water screw compressor Water and waste water compressor centrifugal Water and waste water fan Water and waste water conveyor Water and waste water mixer
Motor Power Range Ac-3	1.1…2 kW at 200…240 V 3 phases
Quantity Per Set	1
Enclosure Mounting	Wall mounted

Environment

Insulation Resistance	> 1 MOhm 500 V DC for 1 minute to earth
Noise Level	54.5 dB conforming to 86/188/EEC
Power Dissipation In W	Natural convection: 29 W at 200 V, switching frequency 4 kHz Forced convection: 53 W at 200 V, switching frequency 4 kHz
Volume Of Cooling Air	38 m3/h
Operating Position	Vertical +/- 10 degree
Maximum Thdi	<48 % full load conforming to IEC 61000-3-12
Electromagnetic Compatibility	Electrostatic discharge immunity test level 3 conforming to IEC 61000-4-2 Radiated radio-frequency electromagnetic field immunity test level 3 conforming to IEC 61000-4-3 Electrical fast transient/burst immunity test level 4 conforming to IEC 61000-4-4 1.2/50 µs - 8/20 µs surge immunity test level 3 conforming to IEC 61000-4-5 Conducted radio-frequency immunity test level 3 conforming to IEC 61000-4-6
Pollution Degree	2 conforming to IEC 61800-5-1
Vibration Resistance	1.5 mm peak to peak (f= 2…13 Hz) conforming to IEC 60068-2-6 1 gn (f= 13…200 Hz) conforming to IEC 60068-2-6

Shock Resistance	15 gn for 11 ms conforming to IEC 60068-2-27
Relative Humidity	5…95 % without condensation conforming to IEC 60068-2-3
Ambient Air Temperature For Operation	-15…50 °C (without derating) 50…60 °C (with derating factor)
Ambient Air Temperature For Storage	-40…70 °C
Operating Altitude	<= 1000 m without derating 1000...4800 m with current derating 1 % per 100 m
Product Certifications	ATEX INERIS CSA TÜV ATEX zone 2/22 DNV-GL UL
Marking	CE
Standards	UL 508C IEC 61800-3 IEC 61800-3 environment 1 category C2 EN/IEC 61800-3 environment 2 category C3 IEC 61800-5-1 IEC 61000-3-12 IEC 60721-3 IEC 61508 IEC 13849-1
Overvoltage Category	III
Regulation Loop	Adjustable PID regulator
Noise Level	54.5 dB
Pollution Degree	2

Packing Units

Unit Type Of Package 1	PCE
Number Of Units In Package 1	1
Package 1 Height	31.500 cm
Package 1 Width	19.000 cm
Package 1 Length	40.500 cm
Package 1 Weight	5.892 kg
Unit Type Of Package 2	P06
Number Of Units In Package 2	6
Package 2 Height	75.000 cm
Package 2 Width	60.000 cm
Package 2 Length	80.000 cm
Package 2 Weight	48.352 kg

Sustainability

Green Premium™ label is Schneider Electric's commitment to delivering products with best-in-class environmental performance. Green Premium promises compliance with the latest regulations, transparency on environmental impacts, as well as circular and low-CO_2 products.

Guide to assessing product sustainability is a white paper that clarifies global eco-label standards and how to interpret environmental declarations.

Learn more about Green Premium >

Guide to assess a product's sustainability >

Transparency RoHS/REACh

Resource performance

- Upgraded Components Available

Well-being performance

- Mercury Free
- Rohs Exemption Information — Yes

Certifications & Standards

Reach Regulation	REACh Declaration
Eu Rohs Directive	Pro-active compliance (Product out of EU RoHS legal scope)
China Rohs Regulation	China RoHS declaration
Environmental Disclosure	Product Environmental Profile
Weee	The product must be disposed on European Union markets following specific waste collection and never end up in rubbish bins
Circularity Profile	End of Life Information

Dimensions Drawings

Dimensions

Drives with IP21 Top Cover

Right and Front Views

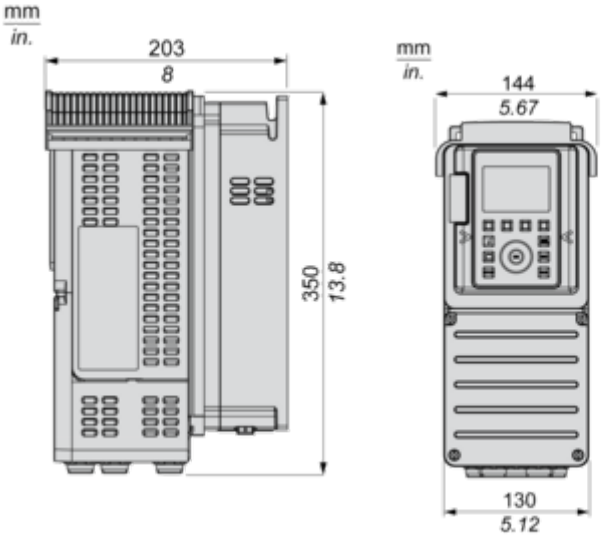

Drives Without IP21 Top Cover

Left and Rear Views

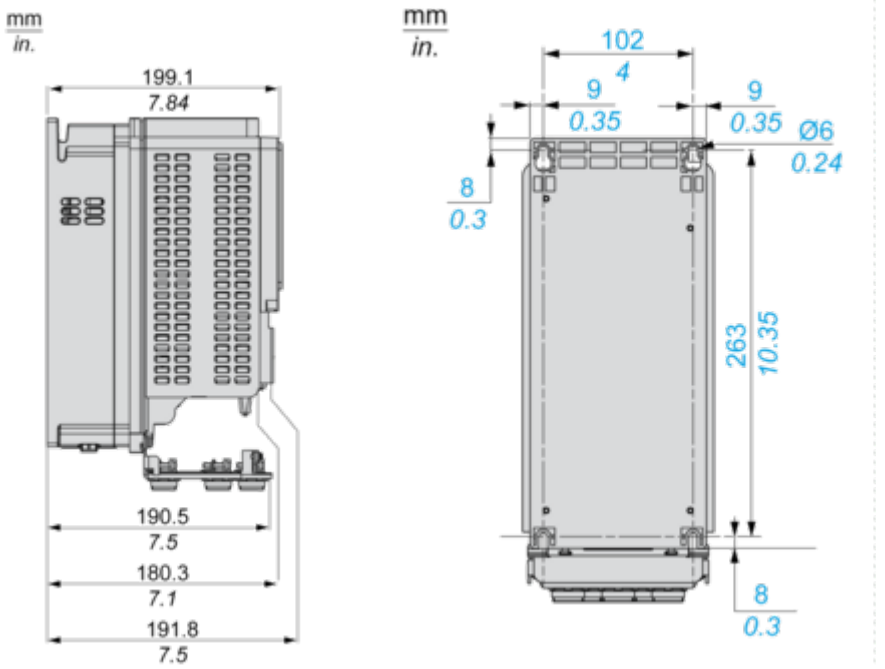

Mounting and Clearance

Clearances

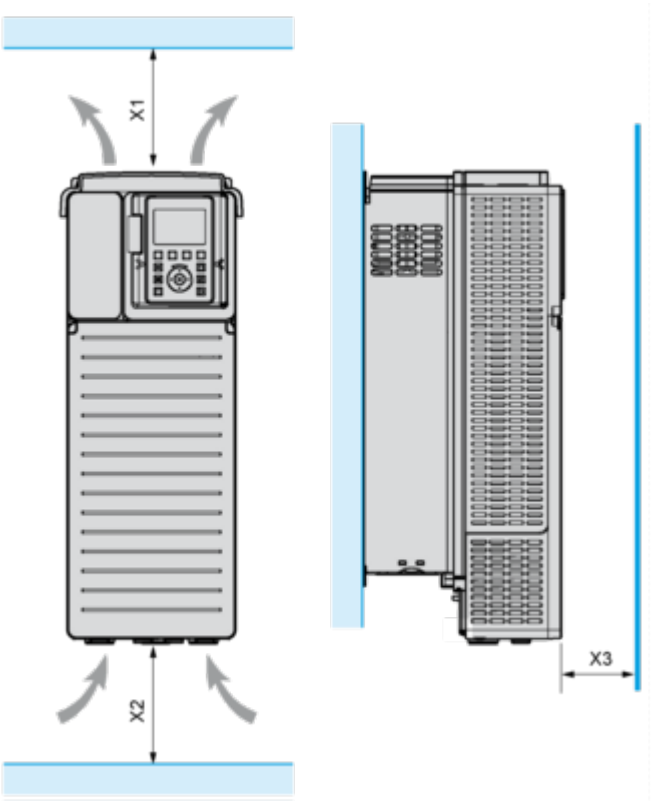

X1	X2	X3
≥ 100 mm (3.94 in.)	≥ 100 mm (3.94 in.)	≥ 10 mm (0.39 in.)

Mounting Types

Mounting Type A: Individual IP21

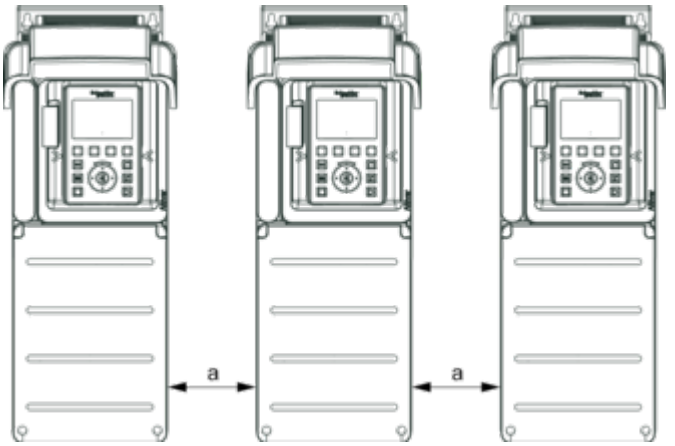

a ≥ 100 mm (3.94 in.)

Mounting Type B: Side by Side IP20

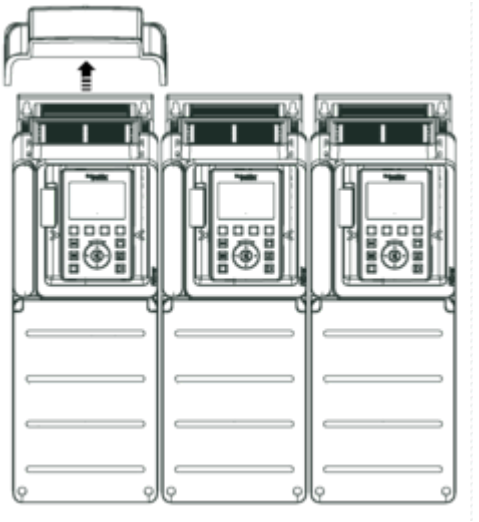

Mounting Type C: Individual IP20

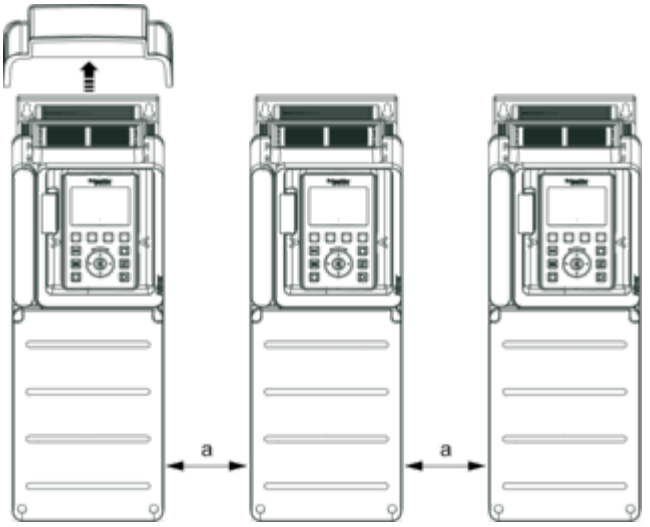

a ≥ 0

Connections and Schema

Three-Phase Power Supply with Upstream Breaking via Line Contactor

Connection diagrams conforming to standards EN 954-1 category 1 and IEC/EN 61508 capacity SIL1, stopping category 0 in accordance with standard IEC/EN 60204-1

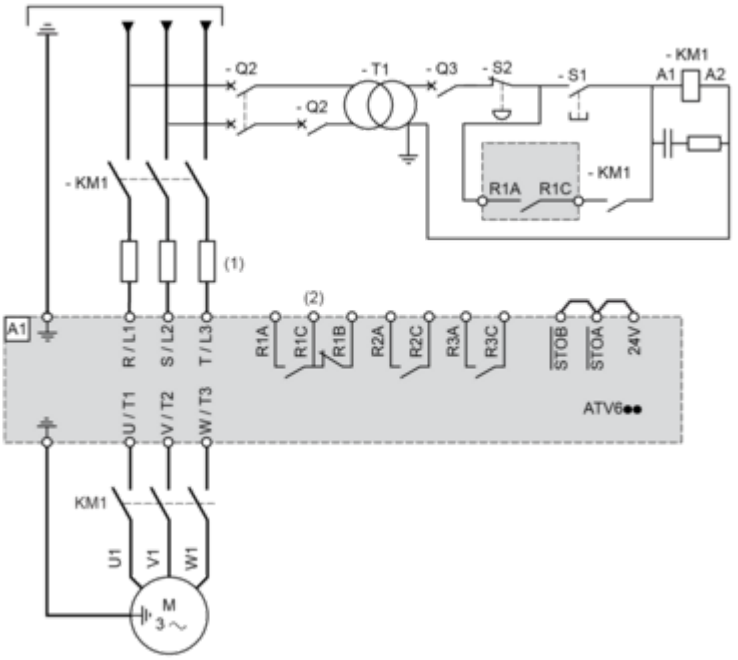

(1) Line choke if used
(2) Use relay R1 set to operating state Fault to switch Off the product once an error is detected.
A1 : Drive
KM1 : Line Contactor
Q2, Q3 : Circuit breakers
S1, S2 : Pushbuttons
T1 : Transformer for control part

Three-Phase Power Supply with Downstream Breaking via Contactor

Connection diagrams conforming to standards EN 954-1 category 1 and IEC/EN 61508 capacity SIL1, stopping category 0 in accordance with standard IEC/EN 60204-1

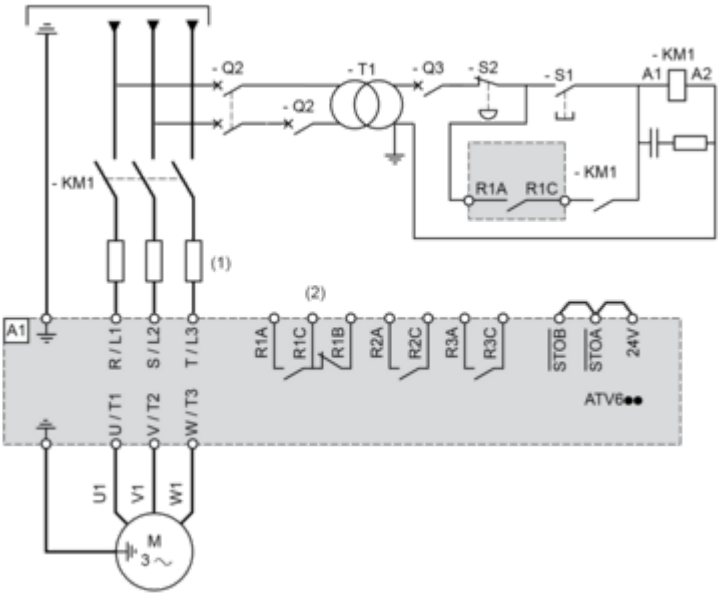

(1) Line choke if used
(2) Use relay R1 set to operating state Fault to switch Off the product once an error is detected.
A1 : Drive
KM1 : Contactor

Control Block Wiring Diagram

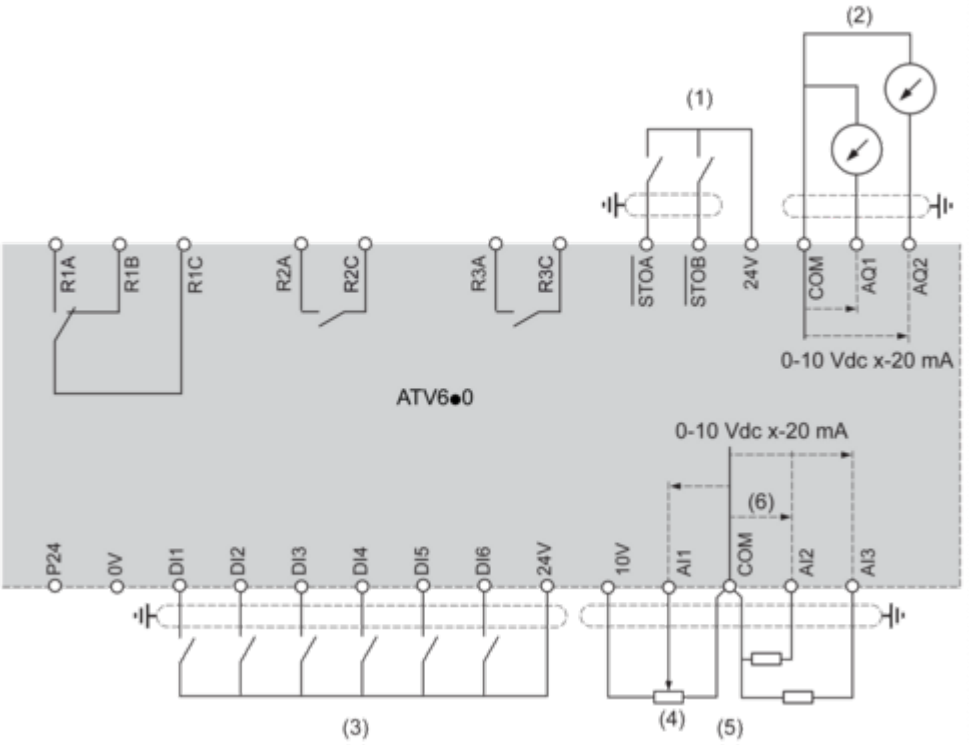

(1) Safe Torque Off
(2) Analog Output
(3) Digital Input
(4) Reference potentiometer
(5) Analog Input
R1A, R1B, R1C : Fault relay
R2A, R2C : Sequence relay
R3A, R3C : Sequence relay

Sensor Connection

It is possible to connect either 1 or 3 sensors on terminals AI2 or AI3.

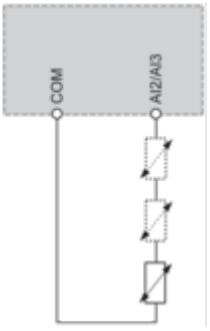

Sink / Source Switch Configuration

The switch is used to adapt the operation of the logic inputs to the technology of the programmable controller outputs.

- Set the switch to Source (factory setting) if using PLC outputs with PNP transistors.
- Set the switch to Ext if using PLC outputs with NPN transistors.

Switch Set to SRC (Source) Position Using the Output Power Supply for the Digital Inputs

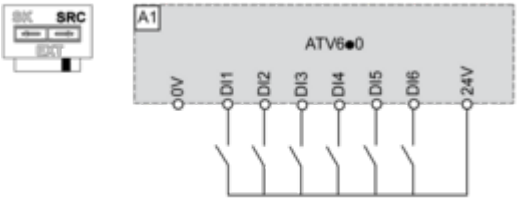

Switch Set to SRC (Source) Position and Use of an External Power Supply for the DIs

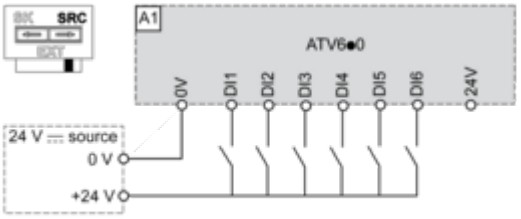

Switch Set to SK (Sink) Position Using the Output Power Supply for the Digital Inputs

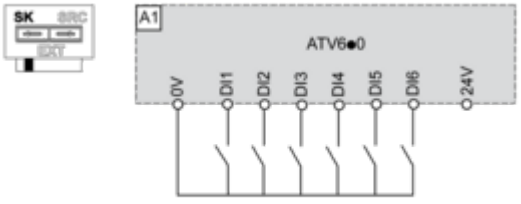

Switch Set to EXT Position Using an External Power Supply for the DIs

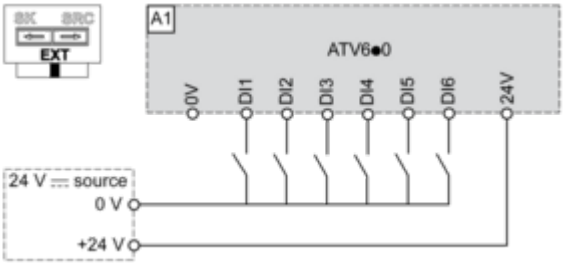

Performance Curves

Derating Curves

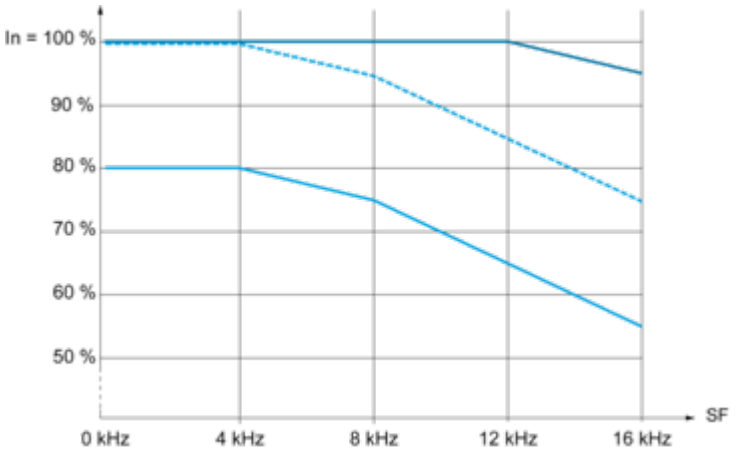

40 °C (104 °F) - Mounting type A, B and C
50 °C (122 °F) - Mounting type A, B and C
60 °C (140 °F) - Mounting type B and C
In : Nominal Drive Current
SF : Switching Frequency