Product datasheet

Specifications

Green Premium™

IIoT Edge Box Core, Harmony iPC, eMMC DC Linux

HMIBSCEA53D1L0A

Discontinued on: 15 Apr 2024

Discontinued

Main

Range Of Product	Harmony iPC
Product Or Component Type	IIoT Edge Box Core
Device Short Name	IIoT Edge Box Core
Range Compatibility	HMIYMIN4GUS1 Interface Mini PCIe 4G US for iPC HMIYMIN4GEU1 Interface Mini PCIe 4G EU for iPC HMIYMIN8AI1 Interface Mini PCIe 8x Analog Input 0-10V HMIYBIN2AIM21 Interface M.2 2x Analog Input 0-10V/4-20mA
Accessory / Separate Part Destination	Celullar 4G and analog Inputs
Processor Name	ARM Cortex-A53 quad core 1.2 GHz Qualcomm Snapdragon 410
Operating System	Linux Yocto (Linux Yocto project Krogoth 2.1) Linux Yocto (BitBake branch 1.30.0) Linux Yocto (Linux Kernel 4.4.38)
Software Package	Node-RED and system nodes default IIoT Wiring

Complementary

Mounting Location	Book mounting Flat mounting Wall mounting
Data Storage Equipment	64 GB eMMC (soldered)
Memory Description	2 GB RAM LPDDR3 internal (not expandable)
Free Slots	1 SD card SD 3.0, max raw transfer rate 104 MBps . Supports SD,SDHC,SDXC (Standard 32 mm x 24 mm)
Number Of Slots	1 slot(s) for mini PCI Express full-size with optional interface plate, 1 slot(s) for M.2 not for storage,
Number Of Slots Available For Expansion	1.0 slot(s) for mini PCIe 1.0 slot(s) for M.2 (not for storage)
Display Resolution	1920 x 1080 pixels at 60 Hz
Watchdog Timer	1…255 ms
Type Of Cooling	Fanless
Electrical Connection	Screw connector, connector type: pin, 1 way, circuit application: ground - location: bottom Connector, connector type: SMA - location: top

Disclaimer: This documentation is not intended as a substitute for and is not to be used for determining suitability or reliability of these products for specific user applications

Integrated Connection Type	HDMI for For configuration only with 1 on bottom Ethernet with 2 RJ45 SMSC LAN7500, transmission rate: 10/100/1000 Mbps on bottom IEEE 1588 not supported COM1 serial link for battery backup with 1 male SUB-D 9 RS232/422/485 non-isolated USB 2.0 port with 2.0 USB type A, transmission rate: 480 Mbit/s on bottom TPM connector Ver 2.0 for cyber security - hardware encryption TPM module HMIYMINATPM201 to be installed/default installed on motherboard
Communication Network Type	1.0 WCN3620 Wi-Fi 2.4 GHz conforming to IEEE 802.11 b/g/n 1.0 WCN3620 Bluetooth 4.1
Cyber Secured Boot	Secure password boot
Connector Type	1.0 GPIO Pin, 8 pins bottom(Software utility provided)
[Us] Rated Supply Voltage	24 V DC power supply 100...240 V AC power supply
Supply Voltage Limits	12…24 V
Inrush Current	0.43 A
Power Consumption In W	16 W
Control Type	Resettable
Impregnation Material	Conformal coated
Main Type	IIoT Edge Box Core
Depth	46 mm
Height	150 mm
Width	157 mm
Net Weight	1 kg

Environment

Standards	Class A group 1 IEC 55011 IEC 61000-6-4 IEC 61131-2 FCC part 15 UL 60950
Product Certifications	CE CULus UL 60950 for IT equipments CCC RCM EAC RED FCC RF IC SRRC TELEC FAC ANATEL
Quality Labels	CE
Directives	2004/108/EC - electromagnetic compatibility 2006/95/EC - low voltage directive
Ip Degree Of Protection	IP40 conforming to IEC 60529
Electromagnetic Compatibility	Immunity to high frequency interference conforming to IEC 61000-4 Disturbing field emission class A conforming to IEC 55011 Conducted and radiated emissions class A conforming to EN 55022
Ambient Air Temperature For Storage	-20…60 °C conforming to IEC 60068-2-2 -20…60 °C conforming to IEC 60068-2-14
Relative Humidity	10…95 % non-condensing conforming to IEC 60068-2-30

Ambient Air Temperature For Operation	0…50 °C (by default) conforming to IEC 60068-2-2 0…50 °C flat mounting 0…45 °C on mini PCIe 0…45 °C flat mounting on mini PCIe
Operating Altitude	2000 m conforming to IEC 60664-1
Vibration Resistance	2 gn (f = 5…500 Hz) eMMC

Packing Units

Unit Type Of Package 1	PCE
Number Of Units In Package 1	1
Package 1 Height	8.5 cm
Package 1 Width	22.0 cm
Package 1 Length	32.0 cm
Package 1 Weight	1.3 kg
Unit Type Of Package 2	S04
Number Of Units In Package 2	6
Package 2 Height	30.0 cm
Package 2 Width	40.0 cm
Package 2 Length	60.0 cm
Package 2 Weight	8.97 kg
Unit Type Of Package 3	P12
Number Of Units In Package 3	72
Package 3 Height	80 cm
Package 3 Width	105 cm
Package 3 Length	125 cm
Package 3 Weight	118.6 kg

Sustainability

Green Premium™ label is Schneider Electric's commitment to delivering products with best-in-class environmental performance. Green Premium promises compliance with the latest regulations, transparency on environmental impacts, as well as circular and low-CO_2 products.

Guide to assessing product sustainability is a white paper that clarifies global eco-label standards and how to interpret environmental declarations.

Learn more about Green Premium >

Guide to assess a product's sustainability >

Transparency RoHS/REACh

Well-being performance

Mercury Free

Rohs Exemption Information	Yes

Certifications & Standards

Reach Regulation	REACh Declaration
Eu Rohs Directive	Pro-active compliance (Product out of EU RoHS legal scope)
China Rohs Regulation	China RoHS declaration
Environmental Disclosure	Product Environmental Profile
Weee	The product must be disposed on European Union markets following specific waste collection and never end up in rubbish bins
Circularity Profile	End of Life Information

Dimensions Drawings

Dimensions

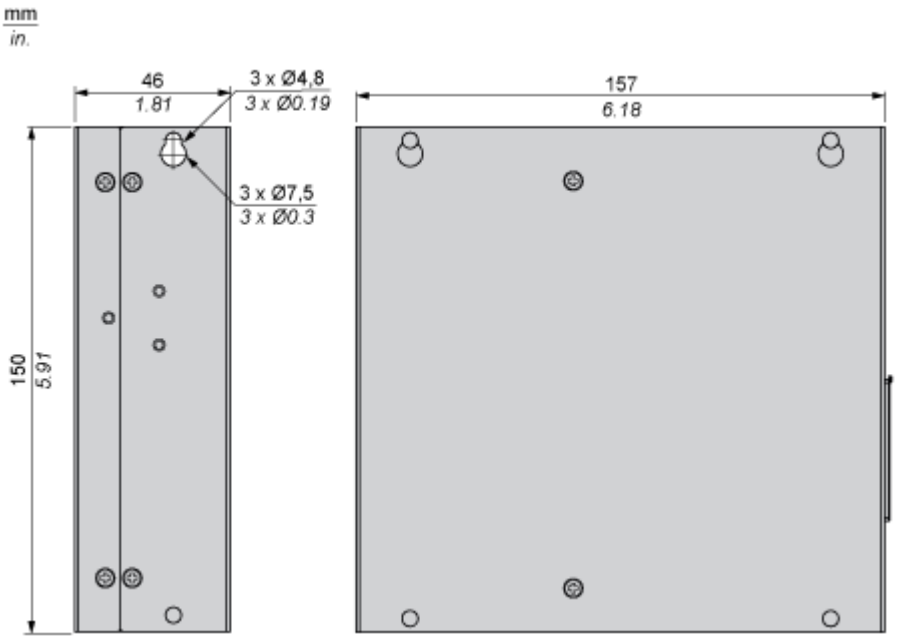

Mounting and Clearance

Spacing Requirements

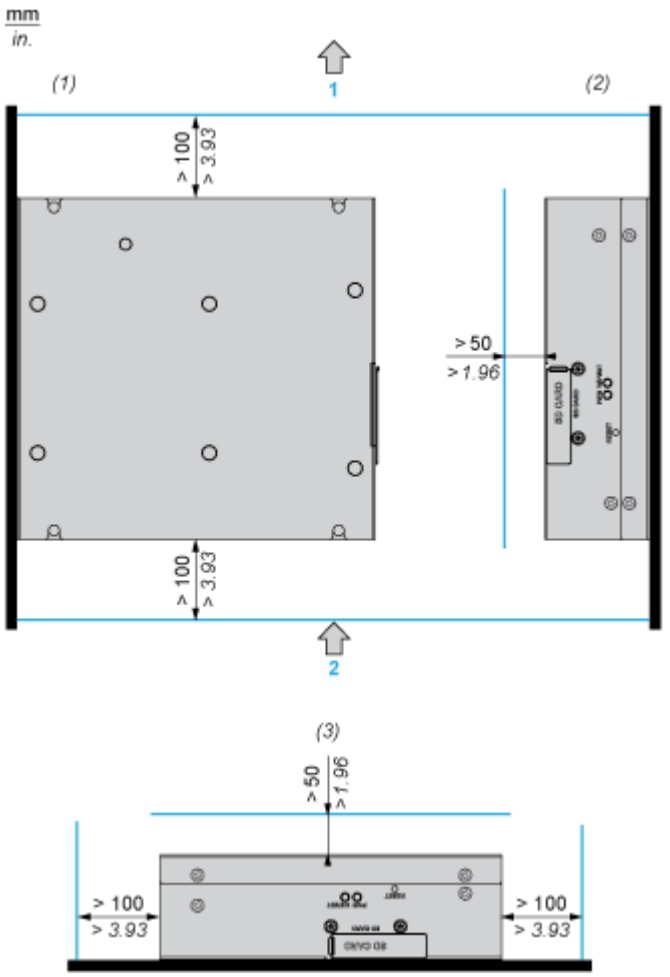

1 : Air out

2 : Air in

(1) Book mounting : Vertical mounting with rear fixing

(2) Wall mounting : Vertical mounting with side fixing

(3) Horizontal mounting