# Product datasheet

Specifications

Green Premium™

## Cam switch body, Harmony K, mutlifixing, plastic, 2 pole, with 0 position, 90°, 12A

K1B1002HL

Discontinued on: 5 Jul 2023

Discontinued

## Main

| | |
|---|---|
| **Range Of Product** | Harmony K |
| **Product Or Component Type** | Cam switch body |
| **Component Name** | K1 |
| **[Ith] Conventional Free Air Thermal Current** | 12 A |
| **Sub-Assembly Composition** | Contact blocks + fixing plate |
| **Cam Switch Function** | Switch |
| **Off Position** | With Off position |
| **Poles Description** | 2P |
| **Switching Positions** | Right: 0° - 90° |
| **Mounting Location** | Front |
| **Fixing Mode** | Multifixing |
| **Bezel Material** | Plastic |

## Complementary

| | |
|---|---|
| **Switching Angle** | 90 ° |
| **[Ui] Rated Insulation Voltage** | 690 V (pollution degree 3) conforming to IEC 60947-1 |
| **[Ithe] Conventional Enclosed Thermal Current** | 10 A |
| **Rated Operational Power In W** | 10500 W AC-21, 500 - 660 V 3 phases conforming to IEC 947-3<br>1100 W AC-3, 230 V 3 phases conforming to IEC 947-3<br>1500 W AC-23A, 230 V 3 phases conforming to IEC 947-3<br>1500 W AC-3, 400 V 1 phase conforming to IEC 947-3<br>1500 W AC-3, 400 V 3 phases conforming to IEC 947-3<br>1500 W AC-3, 500 V 3 phases conforming to IEC 947-3<br>1500 W AC-3, 690 V 3 phases conforming to IEC 947-3<br>2200 W AC-23A, 400 V 3 phases conforming to IEC 947-3<br>2200 W AC-23A, 500 V 3 phases conforming to IEC 947-3<br>2200 W AC-23A, 690 V 3 phases conforming to IEC 947-3<br>4800 W AC-21, 230 V 3 phases conforming to IEC 947-3<br>600 W AC-3, 230 V 1 phase conforming to IEC 947-3<br>8300 W AC-21, 400 V 3 phases conforming to IEC 947-3 |
| **[Ie] Rated Operational Current Ac** | 1.8 A at 690 V AC-3 3 phases conforming to IEC 947-3<br>2.8 A at 500 V AC-3 3 phases conforming to IEC 947-3<br>2.8 A at 690 V AC-23A 3 phases conforming to IEC 947-3<br>3.3 A at 400 V AC-3 3 phases conforming to IEC 947-3<br>3.8 A at 500 V AC-23A 3 phases conforming to IEC 947-3<br>4.6 A at 230 V AC-3 3 phases conforming to IEC 947-3<br>4.8 A at 400 V AC-23A 3 phases conforming to IEC 947-3<br>5.6 A at 230 V AC-23A 3 phases conforming to IEC 947-3<br>1 A at 500 V AC-15 conforming to IEC 947-5-1<br>2 A at 400 V AC-15 conforming to IEC 947-5-1<br>3 A at 230 V AC-15 conforming to IEC 947-5-1 |

Disclaimer: This documentation is not intended as a substitute for and is not to be used for determining suitability or reliability of these products for specific user applications

| | |
|---|---|
| **Electrical Durability** | 1000000 cycles AC-15<br>1000000 cycles AC-21<br>500000 cycles AC-23<br>500000 cycles AC-3 |
| **Maximum Operating Rate** | 2.5 cyc/mn AC-21<br>2.5 cyc/mn AC-23<br>2.5 cyc/mn AC-3<br>8.333 cyc/mn AC-15 |
| **Short-Circuit Current** | 10000 A |
| **Short-Circuit Protection** | 16 A cartridge fuse, type gG |
| **[Uimp] Rated Impulse Withstand Voltage** | 4 kV in isolating function<br>6 kV conforming to IEC 947-1 |
| **Contact Operation** | Slow-break |
| **Positive Opening** | With |
| **Electrical Connection** | Captive screw clamp terminals flexible, clamping capacity: 2 x 1.5 mm²<br>Captive screw clamp terminals solid, clamping capacity: 1 x 2.5 mm² |
| **Mechanical Durability** | 1000000 cycles |
| **Net Weight** | 0.121 kg |

## Environment

| | |
|---|---|
| **Standards** | IEC 60947-3 for power circuit<br>IEC 60947-5-1 for control circuit<br>CENELEC EN 50013 |
| **Product Certifications** | CSA 240 V 3 hp 3 phases 2 -pole(s)<br>UL 240 V 0.33 hp 1 phase 2 -pole(s)<br>CSA 240 V 1 hp 1 phase<br>UL 240 V 1 hp 3 phases |
| **Protective Treatment** | TC |
| **Ambient Air Temperature For Operation** | -25…55 °C |
| **Ambient Air Temperature For Storage** | -40…70 °C |
| **Shock Resistance** | 30 gn conforming to IEC 68-2-27 |
| **Vibration Resistance** | 5 gn conforming to IEC 68-2-6 (f = 10…150 Hz) |
| **Overvoltage Category** | Class II conforming to IEC 536<br>Class II conforming to NF C 20-030 |

## Packing Units

| | |
|---|---|
| **Unit Type Of Package 1** | PCE |
| **Number Of Units In Package 1** | 1 |
| **Package 1 Height** | 8.0 cm |
| **Package 1 Width** | 6.5 cm |
| **Package 1 Length** | 6.5 cm |
| **Package 1 Weight** | 121.0 g |

## Contractual warranty

| | |
|---|---|
| **Warranty** | 18 months |

## Sustainability

**Green Premium™ label** is Schneider Electric's commitment to delivering products with best-in-class environmental performance. Green Premium promises compliance with the latest regulations, transparency on environmental impacts, as well as circular and low-$CO_2$ products.

**Guide to assessing product sustainability** is a white paper that clarifies global eco-label standards and how to interpret environmental declarations.

Learn more about Green Premium >

Guide to assess a product's sustainability >

Transparency RoHS/REACh

## Well-being performance

| | |
|---|---|
| Reach Free Of Svhc | |
| Toxic Heavy Metal Free | |
| Mercury Free | |
| Rohs Exemption Information | Yes |

## Certifications & Standards

| | |
|---|---|
| **Reach Regulation** | REACh Declaration |
| **Eu Rohs Directive** | Pro-active compliance (Product out of EU RoHS legal scope)<br>EU RoHS Declaration |
| **China Rohs Regulation** | China RoHS declaration |
| **Environmental Disclosure** | Product Environmental Profile |
| **Weee** | The product must be disposed on European Union markets following specific waste collection and never end up in rubbish bins |
| **Circularity Profile** | No need of specific recycling operations |

## Dimensions Drawings

### Body

#### Front Mounting “Multi-Fixing”, 2 or 4 Screws

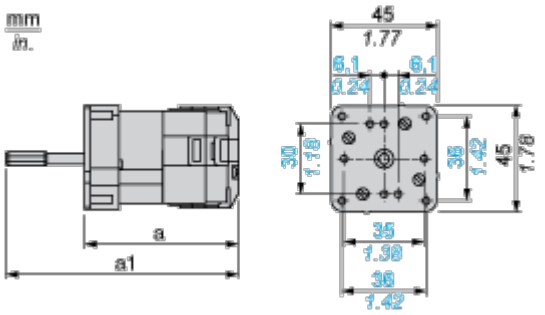


a 53 mm/2.09 in.

a1 77 mm/3.03 in.

Technical Description

**Link Positions (Factory Mounted)**

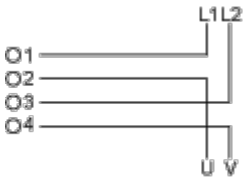

## Angular Position of Switch

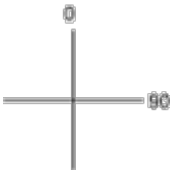

## Switching Program

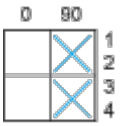

## Convention Used for Switching Program Representation

Contact closed

Contact closed in 2 positions and maintained between the 2 positions

Sealed assembly for auto-maintain control

Overlapping contacts

Spring return position: for a switching angle of 90°, spring return is over 30° after the last position (for a maximum of 3 simultaneous contacts).
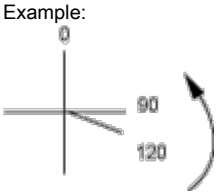
Example: