Product datasheet

Specifications

Green Premium™

Tee, Canalis KSA250, aluminium , 100/160/250A, fixed dimensions (A/B/C 165mm), 3L+N+PE, white RAL9001

KSA250DTC40

Main

Range Of Product	Canalis
Product Name	KS
Device Short Name	KSA
Offer Type	Advanced
Product Or Component Type	Tee
Busbar Description	Standard
Product Compatibility	Canalis KSA busbar trunking 100…250 A
Device Application	Change direction
Conductors Material	Aluminium
Busbar Trunking Polarity	3L + N + PE
[Ie] Rated Operational Current	250 A at 35 °C
Ip Degree Of Protection	IP55 conforming to IEC 60529
[Ue] Rated Operational Voltage	230...690 V
Network Frequency	50/60 Hz
Operating Angle	90 °
Direction Change Type	Edgewise to perpendicular - neutral to up
Colour	White (RAL 9001)
Dimension Type	Made to measure

Complementary

Length	165 mm for side A 165 mm for side B 165 mm for side C
Width	54 mm
Height	146 mm
Net Weight	4.3 kg
Mounting Location	On trunking
Mounting Position	Any position
Electrical Connection	Lubricated sliding contact
Mounting Mode	By screws
Standards	IEC 61439-1 IEC 61439-6

Disclaimer: This documentation is not intended as a substitute for and is not to be used for determining suitability or reliability of these products for specific user applications

Environment

Ik Degree Of Protection	IK08 conforming to IEC 62262

Packing Units

Unit Type Of Package 1	PCE
Number Of Units In Package 1	1
Package 1 Height	24.8 cm
Package 1 Width	21.6 cm
Package 1 Length	44.0 cm
Package 1 Weight	4.782 kg
Unit Type Of Package 2	PAL
Number Of Units In Package 2	6
Package 2 Height	40.0 cm
Package 2 Width	60.0 cm
Package 2 Length	64.0 cm
Package 2 Weight	35.089 kg

Contractual warranty

Warranty	18 months

Sustainability

Green Premium™ label is Schneider Electric's commitment to delivering products with best-in-class environmental performance. Green Premium promises compliance with the latest regulations, transparency on environmental impacts, as well as circular and low-CO_2 products.

Guide to assessing product sustainability is a white paper that clarifies global eco-label standards and how to interpret environmental declarations.

Learn more about Green Premium >

Guide to assess a product's sustainability >

Transparency RoHS/REACh

Well-being performance

Reach Free Of Svhc	
Toxic Heavy Metal Free	
Mercury Free	
Rohs Exemption Information	Yes
Halogen Free Product	

Certifications & Standards

Reach Regulation	REACh Declaration
Eu Rohs Directive	Compliant EU RoHS Declaration
China Rohs Regulation	China RoHS declaration Pro-active China RoHS declaration (out of China RoHS legal scope)
Environmental Disclosure	Product Environmental Profile
Weee	The product must be disposed on European Union markets following specific waste collection and never end up in rubbish bins
Circularity Profile	No need of specific recycling operations

Dimensions Drawings
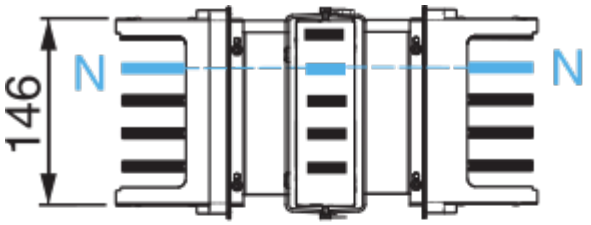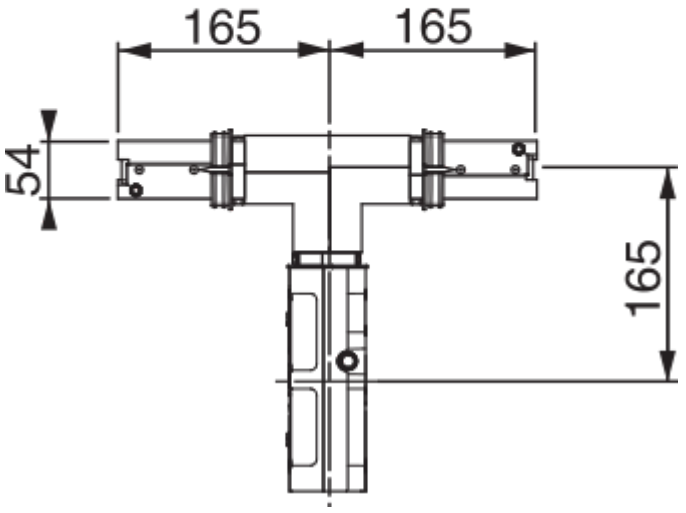
Dimensions