Product datasheet

Specifications

Green Premium™

Star delta starter, TeSys Deca, 3x3P(3NO), 18A, 110VAC 50/60Hz coil, screw clamp terminal

LC3D18AF7

Main

Range	TeSys TeSys Deca
Product Name	TeSys Deca
Product Or Component Type	Star delta starter
Device Short Name	LC3D
Contactor Application	Motor control
Utilisation Category	AC-3
Device Presentation	Pre-wired
Poles Description	3 x 3P
Power Pole Contact Composition	3 x 3 NO
[Ue] Rated Operational Voltage	Power circuit: <= 690 V AC 25...400 Hz
[Ie] Rated Operational Current	18 A (at <60 °C) at <= 440 V AC AC-3 for power circuit
Motor Power Kw	11 kW at 220/230 V AC 50/60 Hz 22 kW at 415 V AC 50/60 Hz 22 kW at 440 V AC 50/60 Hz 18.5 kW at 380/400 V AC 50/60 Hz
Control Circuit Type	AC at 50/60 Hz
[Uc] Control Circuit Voltage	110 V AC 50/60 Hz
Auxiliary Contact Composition	1 NC for KM1 star contactor
[Uimp] Rated Impulse Withstand Voltage	6 kV conforming to IEC 60947
Overvoltage Category	III
[Ui] Rated Insulation Voltage	Power circuit: 690 V conforming to IEC 60947-4-1 Power circuit: 600 V CSA certified Power circuit: 600 V UL certified Signalling circuit: 690 V conforming to IEC 60947-1 Signalling circuit: 600 V CSA certified Signalling circuit: 600 V UL certified
Electrical Durability	1.65 Mcycles 18 A AC-3 at Ue <= 440 V
Safety Cover	Protective cover
Interlocking Type	Mechanical
Mounting Support	Plate
Standards	EN 60947-5-1 EN 60947-4-1 UL 508 IEC 60947-4-1 IEC 60947-5-1 CSA C22.2 No 14 IEC 60335-1

Disclaimer: This documentation is not intended as a substitute for and is not to be used for determining suitability or reliability of these products for specific user applications

Product Certifications	RINA DNV GOST BV LROS (Lloyds register of shipping) GL CSA UL CCC

Complementary

Connections - Terminals	Control circuit: screw clamp terminals 1 1…4 mm² - cable stiffness: flexible without cable end Control circuit: screw clamp terminals 2 1…4 mm² - cable stiffness: flexible without cable end Control circuit: screw clamp terminals 1 1…4 mm² - cable stiffness: flexible with cable end Control circuit: screw clamp terminals 2 1…2.5 mm² - cable stiffness: flexible with cable end Control circuit: screw clamp terminals 1 1…4 mm² - cable stiffness: solid without cable end Control circuit: screw clamp terminals 2 1…4 mm² - cable stiffness: solid without cable end Power circuit: screw clamp terminals 1 1.5…6 mm² - cable stiffness: flexible without cable end Power circuit: screw clamp terminals 2 1.5…6 mm² - cable stiffness: flexible without cable end Power circuit: screw clamp terminals 1 1…6 mm² - cable stiffness: flexible with cable end Power circuit: screw clamp terminals 2 1…4 mm² - cable stiffness: flexible with cable end Power circuit: screw clamp terminals 1 1.5…6 mm² - cable stiffness: solid without cable end Power circuit: screw clamp terminals 2 1.5…6 mm² - cable stiffness: solid without cable end
Tightening Torque	Power circuit: 1.7 N.m - on screw clamp terminals - with screwdriver flat Ø 6 mm Power circuit: 1.7 N.m - on screw clamp terminals - with screwdriver Philips No 2 Control circuit: 1.7 N.m - on screw clamp terminals - with screwdriver flat Ø 6 mm Control circuit: 1.7 N.m - on screw clamp terminals - with screwdriver Philips No 2 Power circuit: 1.7 N.m - on screw clamp terminals - with screwdriver pozidriv No 2 Control circuit: 1.7 N.m - on screw clamp terminals - with screwdriver pozidriv No 2
Maximum Operating Rate	30 cyc/h 60 °C
Starting Time	30 s
Coil Technology	Without built-in suppressor module
Control Circuit Voltage Limits	Drop-out: 0.3...0.6 Uc at 50/60 Hz (at <60 °C) Operational: 0.8...1.1 Uc at 50 Hz (at <60 °C) Operational: 0.85...1.1 Uc at 60 Hz (at <60 °C)
Inrush Power In Va	70 VA 60 Hz cos phi 0.75 (at 20 °C) 70 VA 50 Hz cos phi 0.75 (at 20 °C)
Hold-In Power Consumption In Va	7.5 VA 60 Hz cos phi 0.3 (at 20 °C) 7 VA 50 Hz cos phi 0.3 (at 20 °C)
Heat Dissipation	2…3 W at 50/60 Hz
Auxiliary Contacts Type	Mechanically linked conforming to IEC 60947-5-1 3 x 1 NO + 1 NC Mirror contact conforming to IEC 60947-4-1 3 x 1 NC
Signalling Circuit Frequency	25...400 Hz
Minimum Switching Current	5 mA for signalling circuit
Minimum Switching Voltage	17 V for signalling circuit
Non-Overlap Time	1.5 ms on de-energisation between NC and NO contact 1.5 ms on energisation between NC and NO contact
Width	144 mm
Height	124 mm

Depth	143 mm
Net Weight	1.73 kg

Environment

Insulation Resistance	> 10 MOhm for signalling circuit
Ip Degree Of Protection	IP20 front face conforming to IEC 60529
Climatic Withstand	conforming to IACS E10 conforming to IEC 60947-1 Annex Q category D
Protective Treatment	TH conforming to IEC 60068-2-30
Pollution Degree	3
Ambient Air Temperature For Storage	-60…80 °C
Ambient Air Temperature For Operation	-40…70 °C at Uc
Operating Altitude	3000 m without derating
Fire Resistance	850 °C conforming to IEC 60695-2-1
Flame Retardance	V1 conforming to UL 94
Mechanical Robustness	Vibrations contactor open: 2 Gn, 5...300 Hz Vibrations contactor closed: 4 Gn, 5...300 Hz Shocks contactor open: 10 Gn for 11 ms Shocks contactor closed: 15 Gn for 11 ms

Packing Units

Unit Type Of Package 1	PCE
Number Of Units In Package 1	1
Package 1 Height	18 cm
Package 1 Width	16.5 cm
Package 1 Length	24 cm
Package 1 Weight	1.74 kg
Unit Type Of Package 2	P06
Number Of Units In Package 2	27
Package 2 Height	75 cm
Package 2 Width	60 cm
Package 2 Length	80 cm
Package 2 Weight	59.98 kg

Contractual warranty

Warranty	18 months

Sustainability

Green Premium™ label is Schneider Electric's commitment to delivering products with best-in-class environmental performance. Green Premium promises compliance with the latest regulations, transparency on environmental impacts, as well as circular and low-CO_2 products.

Guide to assessing product sustainability is a white paper that clarifies global eco-label standards and how to interpret environmental declarations.

Learn more about Green Premium >

Guide to assess a product's sustainability >

Transparency RoHS/REACh

Well-being performance

Reach Free Of Svhc	
Toxic Heavy Metal Free	
Mercury Free	
Rohs Exemption Information	Yes
Pvc Free	

Certifications & Standards

Reach Regulation	REACh Declaration
Eu Rohs Directive	Compliant EU RoHS Declaration
China Rohs Regulation	China RoHS declaration Pro-active China RoHS declaration (out of China RoHS legal scope)
Environmental Disclosure	Product Environmental Profile
Weee	The product must be disposed on European Union markets following specific waste collection and never end up in rubbish bins
Circularity Profile	End of Life Information

Dimensions Drawings

Dimensions

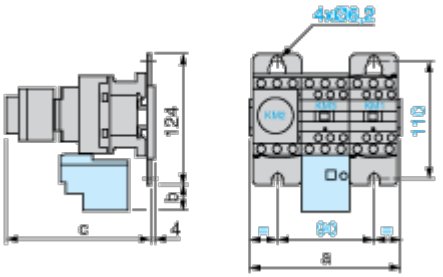

LC3		D09A	D12A	D18A	D32A
a		143	143	144	165
b		26.5	26.5	26.5	32.5
c	with LAD S	139	139	139	145
	with LAD S and sealing cover	143	143	143	149

Connections and Schema

Wiring

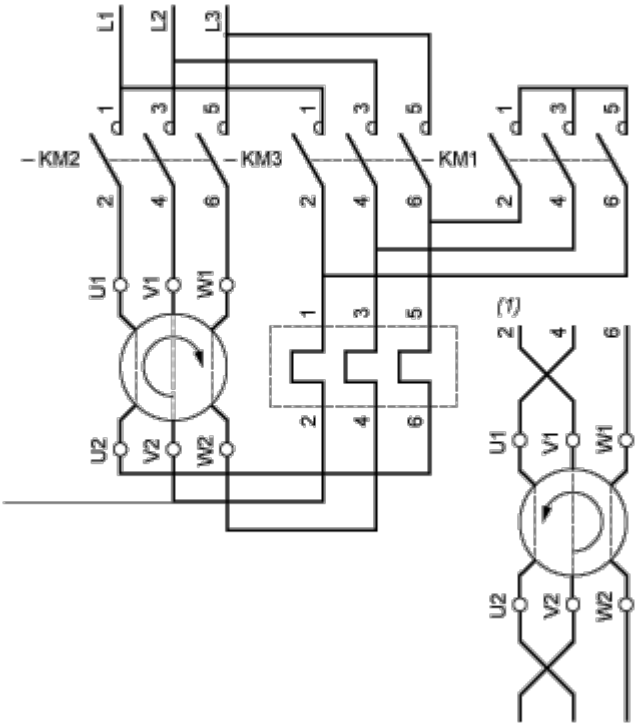

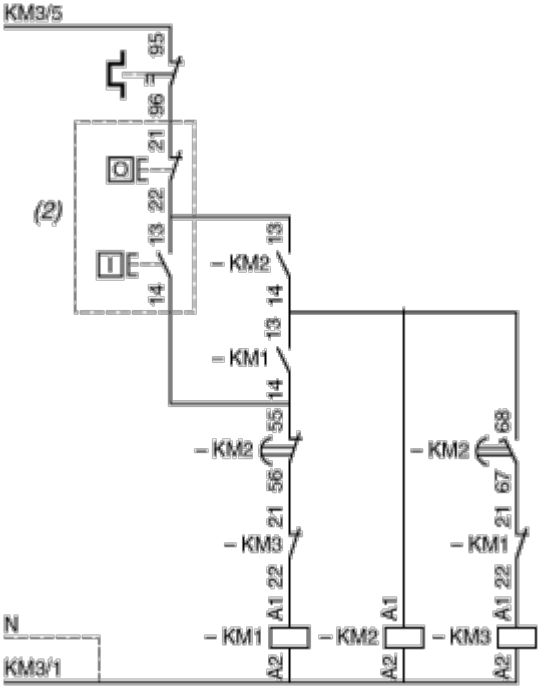

(1) Recommended cabling for reversal of motor rotation (standard motor, viewed from shaft end).

(2) Remote control.

NOTE: LC3 D09A to D18A: Mechanical interlock between KM3 and KM1.