Product datasheet

Specifications

Green Premium™

modem interface - analog PSTN - for communication interface SR2COM01

SR2MOD01

Discontinued on: 12 Feb 2021

Discontinued

Main

Range Of Product	Modicon M251 Modicon M221 Zelio Logic Modicon M241
Product Or Component Type	Analogue PSTN modem
Type Of Modem	SIXNET VT-MODEM-5-WW
Data Backed Up	Flash memory

Complementary

Kit Composition	Analogue PSTN modem 1 telephone cable
Function Available	Transfer program Update firmware monitoring Send alarm/receive instruction Send alarm to e-mail address
Number Of Messages	28
Electrical Data Recording	Telephone/e-mail Discrete and digital value Date and time
[Us] Rated Supply Voltage	12...24 V DC
Supply Voltage Limits	10…30 V
Maximum Supply Current	140 mA at 12 V 70 mA at 24 V 9600 mA
Power Dissipation In W	1.7 W
Electrical Connection	1 cable Com-M specific to Zelio RS232 serial, specific Zelio communication protocol for link with the modem, AT commands 1 cable Com-Z specific to Zelio, specific Zelio communication protocol for Zelio Logic smart relays SR.B..... and SR2 E..... Version (>= V3.1) Telephone cable
Cable Length	2 m
Insulation	1780 V optocoupler, connector type: Com-Z specific to Zelio By the cable SR2 CBL07, connector type: Com-M specific to Zelio
Connections - Terminals	Screw terminals, 1 x 0.25...1 x 2.5 mm² (AWG 24...AWG 14) flexible with cable end Screw terminals, 2 x 0.25...2 x 0.75 mm² (AWG 24...AWG 18) flexible with cable end Screw terminals, 1 x 0.25...1 x 2.5 mm² (AWG 24...AWG 14) semi-solid Screw terminals, 1 x 0.25...1 x 2.5 mm² (AWG 24...AWG 14) solid Screw terminals, 2 x 0.25...2 x 1.5 mm² (AWG 23...AWG 16) solid
Tightening Torque	0.5 N.m
Net Weight	0.265 kg

Disclaimer: This documentation is not intended as a substitute for and is not to be used for determining suitability or reliability of these products for specific user applications

Environment

Product Certifications	FCC part 15 standard C-Tick ACA TS CTR21 GOST UL AS/NZS CSA
Standards	EN/IEC 60068-2-27 Ea EN/IEC 61000-4-5 EN/IEC 60068-2-6 Fc
Electromagnetic Compatibility	Conducted and radiated emissions class B group 1 conforming to EN 55022-11
Ip Degree Of Protection	IP20 (terminal block) conforming to IEC 60529 IP40 (front panel) conforming to IEC 60529
Environmental Characteristic	EMC directive conforming to EN/IEC 61000-6-2 EMC directive conforming to EN/IEC 61000-6-3 EMC directive conforming to EN/IEC 61000-6-4 EMC directive conforming to EN/IEC 61131-2 zone B Low voltage directive conforming to EN/IEC 61131-2
Pollution Degree	2 conforming to EN/IEC 61131-2
Ambient Air Temperature For Operation	-30…70 °C
Ambient Air Temperature For Storage	-40…85 °C
Operating Altitude	2000 m
Maximum Altitude Transport	3048 m
Relative Humidity	5…95 % without condensation

Packing Units

Unit Type Of Package 1	PCE
Number Of Units In Package 1	1
Package 1 Height	6 cm
Package 1 Width	14.5 cm
Package 1 Length	15.3 cm
Package 1 Weight	262 g

Contractual warranty

Warranty	18 months

Sustainability

Green Premium™ label is Schneider Electric's commitment to delivering products with best-in-class environmental performance. Green Premium promises compliance with the latest regulations, transparency on environmental impacts, as well as circular and low-CO_2 products.

Guide to assessing product sustainability is a white paper that clarifies global eco-label standards and how to interpret environmental declarations.

Learn more about Green Premium >

Guide to assess a product's sustainability >

Transparency RoHS/REACh

Well-being performance

Toxic Heavy Metal Free	
Mercury Free	
Rohs Exemption Information	Yes
Pvc Free	

Certifications & Standards

Reach Regulation	REACh Declaration
Eu Rohs Directive	Pro-active compliance (Product out of EU RoHS legal scope) EU RoHS Declaration
China Rohs Regulation	China RoHS declaration
Environmental Disclosure	Product Environmental Profile
Circularity Profile	End of Life Information

Dimensions Drawings

Analogue PSTN Modem

Rail Mounting

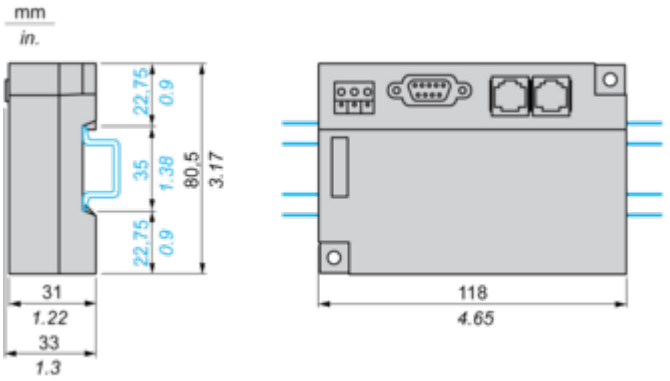
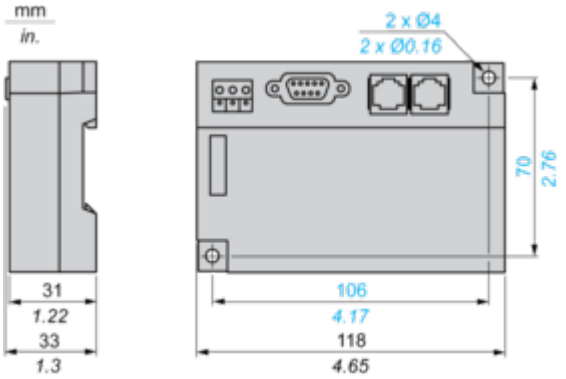
Screw Fixing