Product datasheet

Specifications

Green Premium™

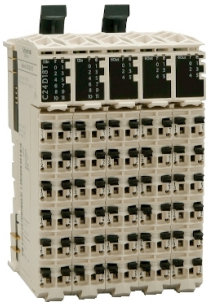

Discontinued

Compact I/O expansion block, Modicon TM5, 8 AI, 8 AO, 0 10 V -12 bits

TM5CAI8O8VL

Discontinued on: 5 Aug 2021

To be end-of-service on: 1 Sept 2024

Main

Range Of Product	Modicon TM5
Product Or Component Type	Compact I/O expansion block
Enclosure Material	Plastic
Colour	White
Input/Output Number	16
Input/Output Number Of Splitter Box	8 I + 8 O
Number Of Modules	Analog input: 2 module(s) x 4 Analog output: 2 module(s) x 4
Analogue Input Number	8
Analogue Input Range	+/- 10 V
Analogue Input Resolution	12 bits for voltage
Analogue Output Number	8
Analogue Output Type	Voltage 8
Analogue Output Range	+/- 10 V

Complementary

Input Filtering	<= 50 ms not configurable
Sampling Duration	20 ms input/output for the whole module 5 ms input/output per channel
Response Time	<= 1 ms status change for output
Maximum Leakage Current	5 µA (when switched off) for output
Protection Type	Short-circuit for output
Isolation	No insulation between channels 500 Vrms AC insulation between channel and bus
Current Consumption	8 mA at 5 V DC bus 218 mA at 24 V DC input/output
Power Dissipation In W	5.25 W
Local Signalling	4 LEDs (green) for power supply 4 LEDs (red) for power supply 8 LEDs (yellow) for output status 8 LEDs (green) for input status
Electrical Connection	Removable spring terminal block

Disclaimer: This documentation is not intended as a substitute for and is not to be used for determining suitability or reliability of these products for specific user applications

Surge Withstand	0.5 kV differential mode 24 V DC conforming to EN/IEC 61000-4-5 1 kV common mode 24 V DC conforming to EN/IEC 61000-4-5
Mounting Support	DIN rail
Net Weight	0.25 kg

Environment

Standards	UL 508 CSA C22.2 No 142 CSA C22.2 No 213 IEC 61131-2
Product Certifications	C-Tick GOST-R UL CSA
Marking	CE
Ambient Air Temperature For Operation	-10…50 °C (vertical installation) -10…60 °C (horizontal installation)
Ambient Air Temperature For Storage	-40…70 °C
Relative Humidity	5…95 % without condensation
Ip Degree Of Protection	IP20 conforming to IEC 61131-2
Pollution Degree	2 conforming to IEC 60664
Operating Altitude	0...2000 m
Storage Altitude	0…3000 m
Vibration Resistance	1 gn at 8.4…150 Hz on DIN rail 3.5 mm at 5…8.4 Hz on DIN rail
Shock Resistance	15 gn for 11 ms
Resistance To Electrostatic Discharge	4 kV on contact conforming to EN/IEC 61000-4-2 8 kV in air conforming to EN/IEC 61000-4-2
Resistance To Electromagnetic Fields	1 V/m 2...2.7 GHz conforming to EN/IEC 61000-4-3 10 V/m 80...2000 MHz conforming to EN/IEC 61000-4-3
Resistance To Fast Transients	1 kV (I/O) conforming to EN/IEC 61000-4-4 1 kV (shielded cable) conforming to EN/IEC 61000-4-4 2 kV (power lines) conforming to EN/IEC 61000-4-4
Electromagnetic Compatibility	EN/IEC 61000-4-6
Disturbance Radiated/Conducted	CISPR 11 zone B - class A

Packing Units

Unit Type Of Package 1	PCE
Number Of Units In Package 1	1
Package 1 Height	7.0 cm
Package 1 Width	9.0 cm
Package 1 Length	11.0 cm
Package 1 Weight	284.0 g
Unit Type Of Package 2	S03
Number Of Units In Package 2	36
Package 2 Height	30.0 cm
Package 2 Width	30.0 cm

Package 2 Length	40.0 cm
Package 2 Weight	10.224 kg

Contractual warranty

Warranty	18 months

Sustainability

Green Premium™ label is Schneider Electric's commitment to delivering products with best-in-class environmental performance. Green Premium promises compliance with the latest regulations, transparency on environmental impacts, as well as circular and low-CO_2 products.

Guide to assessing product sustainability is a white paper that clarifies global eco-label standards and how to interpret environmental declarations.

Learn more about Green Premium >

Guide to assess a product's sustainability >

Transparency RoHS/REACh

Well-being performance

Toxic Heavy Metal Free	
Mercury Free	
Rohs Exemption Information	Yes
Pvc Free	

Certifications & Standards

Reach Regulation	REACh Declaration
Eu Rohs Directive	Pro-active compliance (Product out of EU RoHS legal scope)
China Rohs Regulation	China RoHS declaration
Environmental Disclosure	Product Environmental Profile
Weee	The product must be disposed on European Union markets following specific waste collection and never end up in rubbish bins
Circularity Profile	End of Life Information

Presentation

TM5 Compact I/O Module

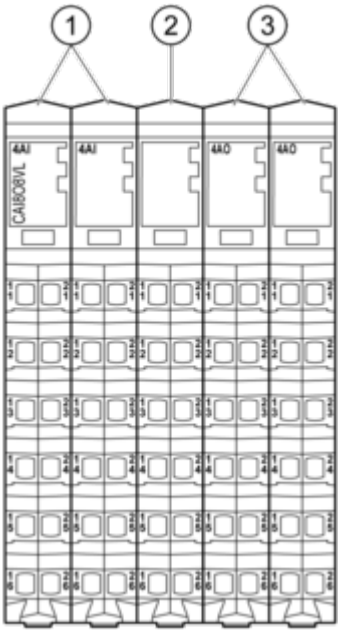

N°	Designation
1	Analog Input electronic module / 4 Analog Inputs
2	Dummy Module
3	Analog Output electronic module / 4 Analog Outputs

Dimensions Drawings

Compact I/O Module

Dimensions

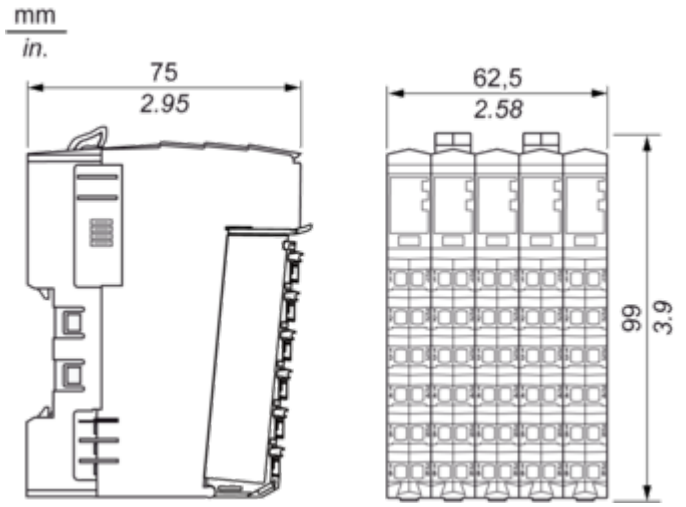

Mounting and Clearance

TM5 System

Spacing Requirements

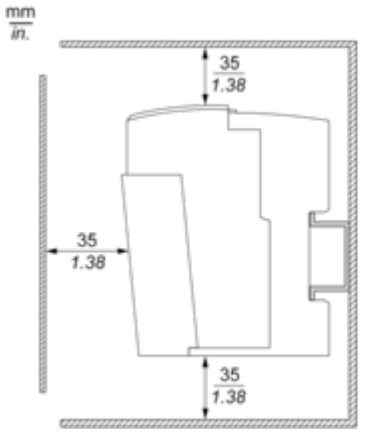

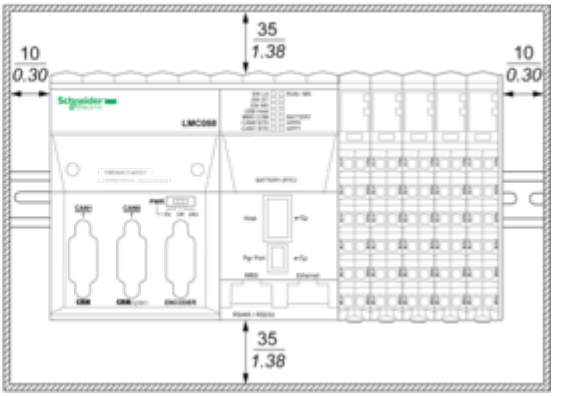

Mounting on a DIN Rail

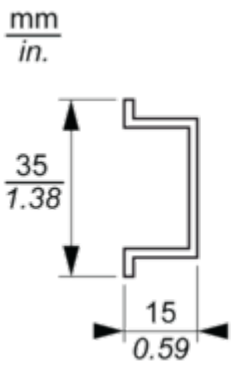

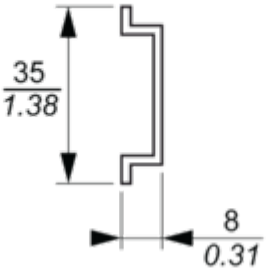

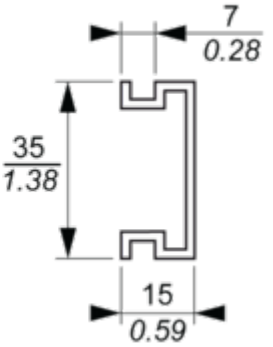

Connections and Schema

TM5 System Wiring Recommendations

Wire Sizes to Use with the Removable Spring Terminal Blocks

mm / in. 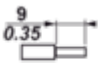				
mm²	0,08…2,5	0,25…2,5	0,25…1,5	2 x 0,25...2 x 0,75
AWG	28…14	24…14	24…16	2 x 24…2 x 18

Analog Input 4AI ±10 V

Wiring Diagram

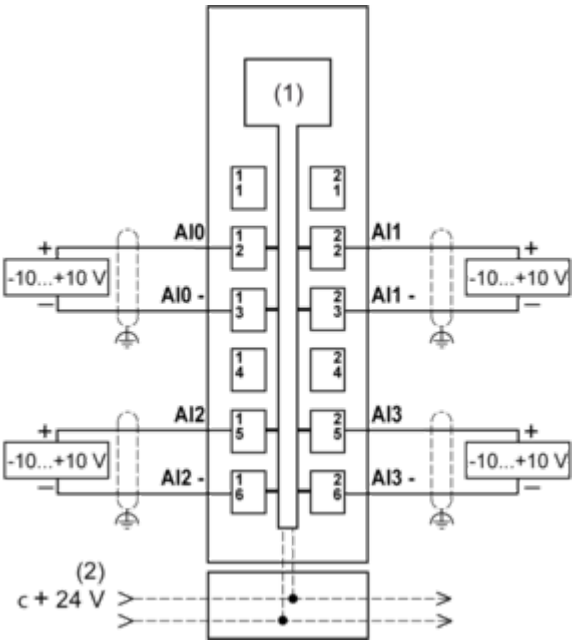

1 Internal electronics
2 24 Vdc I/O power segment integrated into the bus bases
U Voltage

Analog Output 4AO ±10 V

Wiring Diagram

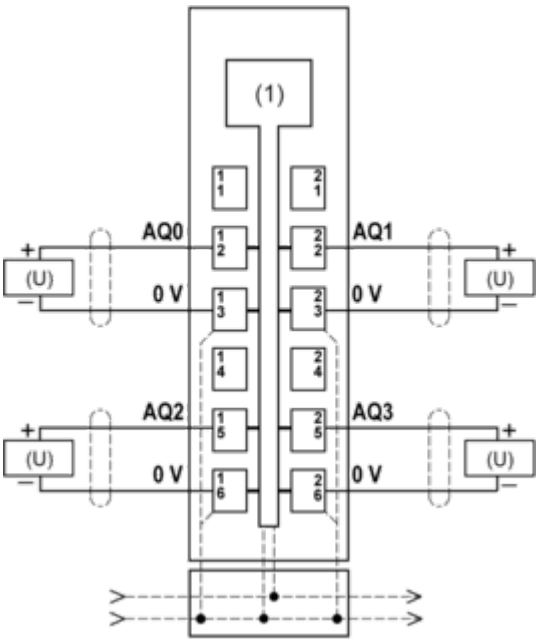

1 Internal electronics
2 24 Vdc I/O power segment integrated into the bus bases
U Voltage