# Product datasheet

Specifications

## Discrete output module, Modicon TM5, digital 2O, 100 to 240 V AC, 1 A, 3 wires

TM5SDO2S

## Main

| | |
|---|---|
| **Range Of Product** | Modicon TM5 |
| **Product Or Component Type** | Discrete output module |
| **Discrete Output Number** | 2 |
| **Discrete Output Type** | Relay |

## Complementary

| | |
|---|---|
| **Range Compatibility** | Modicon M258<br>Modicon LMC058<br>PacDrive LMC motion controller |
| **Product Compatibility** | Motion controller<br>PacDrive LMC Pro 2<br>PacDrive LMC Eco<br>PacDrive LMC Pro<br>Logic controller |
| **Output Voltage** | 100...240 V AC |
| **Current Per Channel** | 1 A |
| **Colour** | Black |
| **Electrical Connection** | 3 wires |
| **Marking** | CE |

## Environment

| | |
|---|---|
| **Standards** | CSA C22.2 No 142<br>IEC 61131-2<br>CSA C22.2 No 213<br>UL 508 |
| **Product Certifications** | CSA<br>GOST-R<br>cULus<br>C-Tick |
| **Ambient Air Temperature For Operation** | -10…55 °C without derating (horizontal installation)<br>-10…60 °C with derating factor (horizontal installation)<br>-10…50 °C (vertical installation) |
| **Ambient Air Temperature For Storage** | -40…70 °C |
| **Relative Humidity** | 5…95 % without condensation |
| **Ip Degree Of Protection** | IP20 conforming to IEC 61131-2 |
| **Pollution Degree** | 2 conforming to IEC 60664 |
| **Operating Altitude** | 0...2000 m |
| **Storage Altitude** | 0…3000 m |

Disclaimer: This documentation is not intended as a substitute for and is not to be used for determining suitability or reliability of these products for specific user applications

| | |
|---|---|
| **Vibration Resistance** | 1 gn at 8.4…150 Hz on DIN rail<br>3.5 mm at 5…8.4 Hz on DIN rail |
| **Shock Resistance** | 15 gn for 11 ms |
| **Electromagnetic Compatibility** | Electrostatic discharge immunity test, 4 kV on contact conforming to IEC 61000-4-2<br>Electrostatic discharge immunity test, 8 kV in air conforming to IEC 61000-4-2<br>Susceptibility to electromagnetic fields, 1 V/m 2...2.7 GHz conforming to IEC 61000-4-3<br>Susceptibility to electromagnetic fields, 10 V/m 80...2000 MHz conforming to IEC 61000-4-3<br>Electrical fast transient/burst immunity test, 1 kV I/O conforming to IEC 61000-4-4<br>Electrical fast transient/burst immunity test, 1 kV shielded cable conforming to IEC 61000-4-4<br>Electrical fast transient/burst immunity test, 2 kV power lines conforming to IEC 61000-4-4<br>1.2/50 µs shock waves immunity test, 0.5 kV differential mode conforming to IEC 61000-4-5<br>1.2/50 µs shock waves immunity test, 1 kV common mode conforming to IEC 61000-4-5<br>Conducted RF disturbances conforming to IEC 61000-4-6<br>Conducted and radiated emissions conforming to CISPR 11 |

## Packing Units

| | |
|---|---|
| **Unit Type Of Package 1** | PCE |
| **Number Of Units In Package 1** | 1 |
| **Package 1 Height** | 2.0 cm |
| **Package 1 Width** | 6.0 cm |
| **Package 1 Length** | 10.5 cm |
| **Package 1 Weight** | 51.0 g |

## Contractual warranty

| | |
|---|---|
| **Warranty** | 18 months |

## Sustainability

**Green Premium™ label** is Schneider Electric's commitment to delivering products with best-in-class environmental performance. Green Premium promises compliance with the latest regulations, transparency on environmental impacts, as well as circular and low-$CO_2$ products.

**Guide to assessing product sustainability** is a white paper that clarifies global eco-label standards and how to interpret environmental declarations.

Learn more about Green Premium >

Guide to assess a product's sustainability >

Transparency RoHS/REACh

## Well-being performance

| | |
|---|---|
| Reach Free Of Svhc | |
| Toxic Heavy Metal Free | |
| Mercury Free | |
| Rohs Exemption Information | Yes |
| Pvc Free | |

## Certifications & Standards

| | |
|---|---|
| **Reach Regulation** | REACh Declaration |
| **Eu Rohs Directive** | Pro-active compliance (Product out of EU RoHS legal scope)<br>EU RoHS Declaration |
| **China Rohs Regulation** | China RoHS declaration |
| **Environmental Disclosure** | Product Environmental Profile |
| **Weee** | The product must be disposed on European Union markets following specific waste collection and never end up in rubbish bins |
| **Circularity Profile** | End of Life Information |

## Dimensions Drawings

### TM5 Slice

#### Dimensions

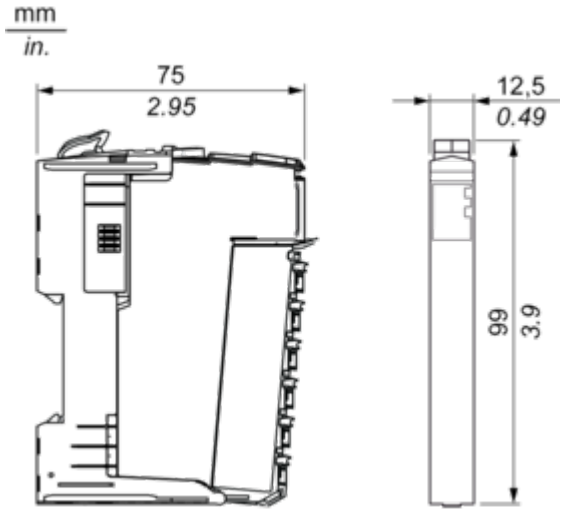

Mounting and Clearance

## TM5 System

### Spacing Requirements

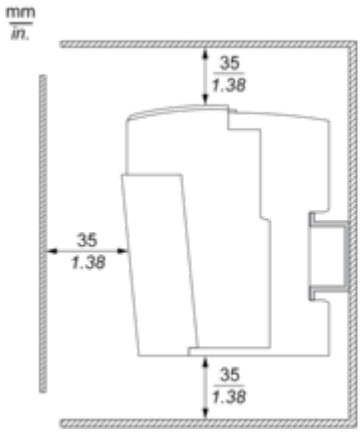


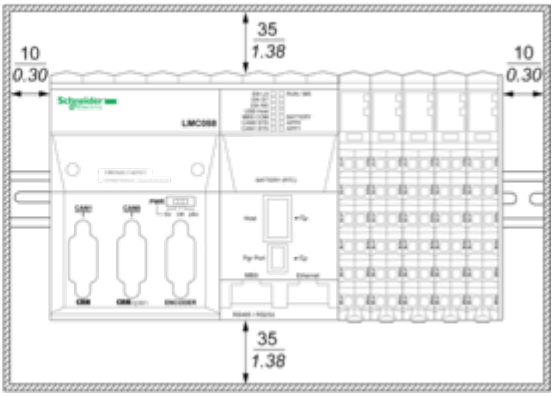


### Mounting on a DIN Rail

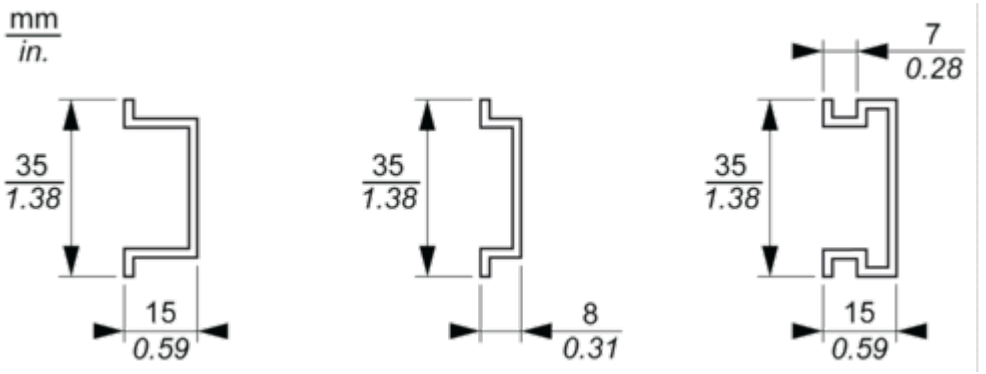

## Connections and Schema

### Electronic Module 2DO 240 Vac Triac 1 A 3 Wires

#### Wiring Diagram

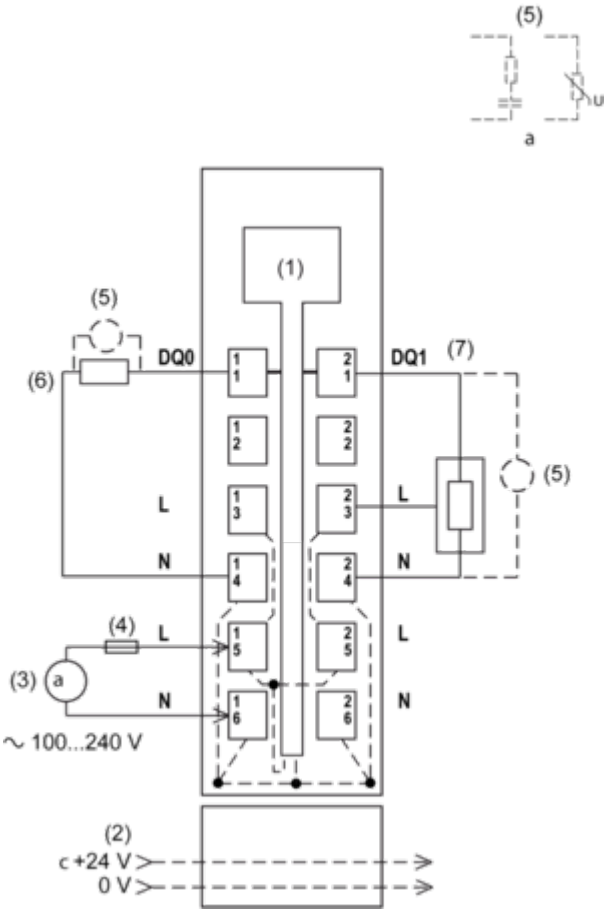


**1** Internal electronics
**2** 24 Vdc I/O power segment integrated into the bus bases
**3** External power supply 100...240 Vac
**4** External fuse type T slow-blow 3.15 A - 250 V
**5** Inductive load protection
**6** 2-wire load
**7** 3-wire load