Product datasheet

Specifications

Green Premium™

control station XAL-E - 1 flush pushbutton - spring return - red - 1 C/O

XALE1115

Discontinued on: 29 Jan 2021

Discontinued

Main

Range Of Product	Harmony XALE
Product Or Component Type	Complete control station
Device Short Name	XALE
Product Destination	For XB7 Ø 22 mm control and signalling units
Control Station Application	One function
Colour Of Base Of Enclosure	Light grey (RAL 7035)
Colour Of Cover	Light grey (RAL 7035)
Material	ABS (acrylonitrile butadiene-styrene)
Ip Degree Of Protection	IP54 conforming to IEC 60529
Control Station Composition	1 flush push-button, red, spring return
Contact Operation	Slow-break

Complementary

Cable Entry	2 knock-outs, clamping capacity: 16 mm 4 knock-outs for ISO M20
Net Weight	0.1 kg
Marking	CE
Positive Opening	Without
Short-Circuit Protection	4 A cartridge fuse type gG conforming to EN/IEC 60947-5-1
[Ui] Rated Insulation Voltage	250 V (pollution degree 3) conforming to EN/IEC 60947-1
[Uimp] Rated Impulse Withstand Voltage	4 kV conforming to EN/IEC 60947-1
[Ie] Rated Operational Current	0.1 A at 250 V, DC-13, R300 conforming to EN/IEC 60947-5-1 0.22 A at 125 V, DC-13, R300 conforming to EN/IEC 60947-5-1 0.3 A at 240 V, AC-14, D300 conforming to EN/IEC 60947-5-1 0.6 A at 120 V, AC-14, D300 conforming to EN/IEC 60947-5-1
Electrical Reliability	Λ <= 10exp(-6) at 17 V and 5 mA conforming to IEC 60947-5-4

Environment

Protective Treatment	TC
Ambient Air Temperature For Storage	-40…70 °C
Ambient Air Temperature For Operation	-25…55 °C
Electrical Shock Protection Class	Class II conforming to IEC 60536

Disclaimer: This documentation is not intended as a substitute for and is not to be used for determining suitability or reliability of these products for specific user applications

Ik Degree Of Protection	IK05 conforming to EN 50102
Standards	EN/IEC 60947-5-1 EN/IEC 60947-1 EN/IEC 62208 EN/IEC 60947-5-5

Contractual warranty

Warranty	18 months

Sustainability

Green Premium™ label is Schneider Electric's commitment to delivering products with best-in-class environmental performance. Green Premium promises compliance with the latest regulations, transparency on environmental impacts, as well as circular and low-CO_2 products.

Guide to assessing product sustainability is a white paper that clarifies global eco-label standards and how to interpret environmental declarations.

Learn more about Green Premium >

Guide to assess a product's sustainability >

Transparency RoHS/REACh

Well-being performance

Toxic Heavy Metal Free	
Mercury Free	
Rohs Exemption Information	Yes

Certifications & Standards

Reach Regulation	REACh Declaration
Eu Rohs Directive	Pro-active compliance (Product out of EU RoHS legal scope) EU RoHS Declaration
China Rohs Regulation	China RoHS declaration
Environmental Disclosure	Product Environmental Profile
Weee	The product must be disposed on European Union markets following specific waste collection and never end up in rubbish bins
Circularity Profile	End of Life Information

Dimensions Drawings

Dimensions

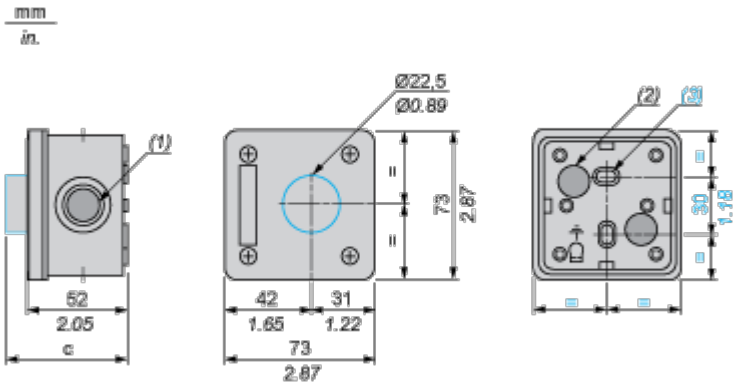

(1) 4 ISO 20 knock-outs.

(2) 2 knock-outs for cable entry, maximum capacity 16 mm / 0.63 in.

(3) 2 knock-out elongated fixing holes Ø 3 mm x 5 mm / Ø 0.12 in. x 0.20 in.

Control station XALE fitted with:	c in mm	c in in.
Flush pushbutton	61	2.40
Projecting pushbutton	63	2.48
Illuminated pushbutton	66.5	2.62
Pilot light	63	2.48
Emergency stop without key	81.5	3.21
Selector switch with standard handle	76.5	3.01
Key switch	92	3.62