Product datasheet

Specifications

Green Premium™

yellow station - 1 red mushroom head pushbutton Ø40 key release 1NO+1NC

XALK184E

Discontinued on: 9 Dec 2022

Discontinued

Main

Range Of Product	Harmony XALK
Product Or Component Type	Complete control station
Device Short Name	XALK
Product Destination	For XB5 Ø 22 mm control and signalling units
Control Station Application	Emergency switching off function
Colour Of Base Of Enclosure	Light grey (RAL 7035)
Colour Of Cover	Yellow (RAL 1021)
Material	Polycarbonate
Operator Profile	1 mushroom head push-button
Operators Description	Red unmarked 1 NO + 1 NC
Reset	Key release
Control Station Composition	1 mushroom head Ø 40 mm push-button, red 1 NO + 1 NC unmarked marking
Contact Operation	Slow-break

Complementary

Cable Entry	1 knock-out for cable entry 0…14 mm 2 knock-outs for Pg 13 cable gland and ISO M20 0…12 mm
Net Weight	0.188 kg
Resistance To High Pressure Washer	7000000 Pa at 55 °C, distance : 0.1 m
Key Number	455
Positive Opening	With conforming to EN/IEC 60947-5-1 appendix K
Operating Travel	1.5 mm (NC changing electrical state) 2.6 mm (NO changing electrical state) 4.3 mm (total travel)
Operating Force	40 N NC + NO changing electrical state
Mechanical Durability	300000 cycles
Connections - Terminals	Screw clamp terminals, <= 2 x 1.5 mm² with cable end conforming to EN/IEC 60947-1 Screw clamp terminals, >= 1 x 0.22 mm² without cable end conforming to EN/IEC 60947-1
Tightening Torque	0.8…1.2 N.m conforming to EN/IEC 60947-1

Disclaimer: This documentation is not intended as a substitute for and is not to be used for determining suitability or reliability of these products for specific user applications

Shape Of Screw Head	Cross compatible with Philips no 1 screwdriver Cross compatible with pozidriv No 1 screwdriver Slotted compatible with flat Ø 4 mm screwdriver Slotted compatible with flat Ø 5.5 mm screwdriver
Contacts Material	Silver alloy (Ag/Ni)
Short-Circuit Protection	10 A cartridge fuse type gG conforming to EN/IEC 60947-5-1
[Ith] Conventional Free Air Thermal Current	10 A conforming to EN/IEC 60947-5-1
[Ui] Rated Insulation Voltage	600 V (pollution degree 3) conforming to EN/IEC 60947-1
[Uimp] Rated Impulse Withstand Voltage	6 kV conforming to EN/IEC 60947-1
[Ie] Rated Operational Current	3 A at 240 V, AC-15, A600 conforming to EN/IEC 60947-5-1 6 A at 120 V, AC-15, A600 conforming to EN/IEC 60947-5-1 0.1 A at 600 V, DC-13, Q600 conforming to EN/IEC 60947-5-1 0.27 A at 250 V, DC-13, Q600 conforming to EN/IEC 60947-5-1 0.55 A at 125 V, DC-13, Q600 conforming to EN/IEC 60947-5-1 1.2 A at 600 V, AC-15, A600 conforming to EN/IEC 60947-5-1
Electrical Durability	1000000 cycles, AC-15, 2 A at 230 V, operating rate <3600 cyc/h, load factor: 0.5 conforming to EN/IEC 60947-5-1 appendix C 1000000 cycles, AC-15, 3 A at 120 V, operating rate <3600 cyc/h, load factor: 0.5 conforming to EN/IEC 60947-5-1 appendix C 1000000 cycles, AC-15, 4 A at 24 V, operating rate <3600 cyc/h, load factor: 0.5 conforming to EN/IEC 60947-5-1 appendix C 1000000 cycles, DC-13, 0.2 A at 110 V, operating rate <3600 cyc/h, load factor: 0.5 conforming to EN/IEC 60947-5-1 appendix C 1000000 cycles, DC-13, 0.5 A at 24 V, operating rate <3600 cyc/h, load factor: 0.5 conforming to EN/IEC 60947-5-1 appendix C
Electrical Reliability	Λ < 10exp(-6) at 5 V, 1 mA conforming to EN/IEC 60947-5-4 Λ < 10exp(-8) at 17 V, 5 mA conforming to EN/IEC 60947-5-4

Environment

Protective Treatment	TH
Ambient Air Temperature For Storage	-40…70 °C
Ambient Air Temperature For Operation	-40…70 °C
Overvoltage Category	Class II conforming to IEC 60536
Ip Degree Of Protection	IP66 conforming to IEC 60529 IP67 IP69 IP69K
Nema Degree Of Protection	NEMA 13 NEMA 4X
Ik Degree Of Protection	IK03 conforming to EN 50102
Standards	EN/IEC 60947-1 EN/IEC 60947-5-4 IEC 60364-5-53 EN/IEC 60947-5-1 JIS C 4520 EN/IEC 60947-5-5 CSA C22.2 No 14 UL 508
Vibration Resistance	5 gn (f= 12…500 Hz) conforming to IEC 60068-2-6
Shock Resistance	30 gn (duration = 18 ms) for half sine wave acceleration conforming to IEC 60068-2-27 50 gn (duration = 11 ms) for half sine wave acceleration conforming to IEC 60068-2-27

Contractual warranty

Warranty	18 months

Sustainability

Green Premium™ label is Schneider Electric's commitment to delivering products with best-in-class environmental performance. Green Premium promises compliance with the latest regulations, transparency on environmental impacts, as well as circular and low-CO_2 products.

Guide to assessing product sustainability is a white paper that clarifies global eco-label standards and how to interpret environmental declarations.

Learn more about Green Premium >

Guide to assess a product's sustainability >

Transparency RoHS/REACh

Well-being performance

Mercury Free

Rohs Exemption Information	Yes

Certifications & Standards

Reach Regulation	REACh Declaration
Eu Rohs Directive	Pro-active compliance (Product out of EU RoHS legal scope)
China Rohs Regulation	China RoHS declaration
Environmental Disclosure	Product Environmental Profile
Weee	The product must be disposed on European Union markets following specific waste collection and never end up in rubbish bins
Circularity Profile	End of Life Information

Dimensions Drawings

Dimensions

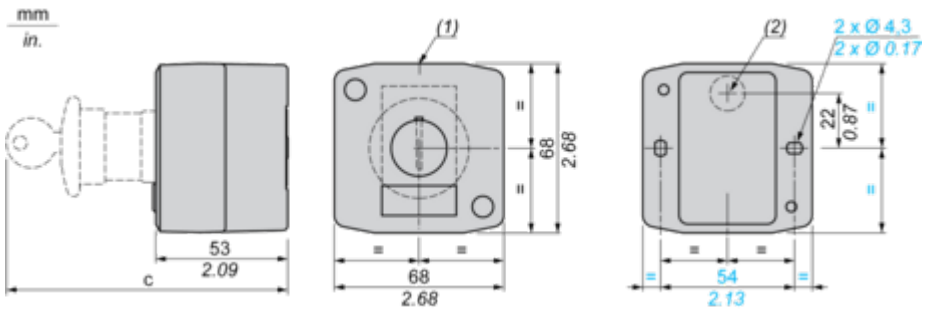

(1) 2 knock-outs for Pg 13.5 cable gland, maximum capacity 12 mm/0.47 in.
(2) Knock-out for cable entry, maximum capacity 14 mm/0.55 in.

Control station fitted with:	c in mm	c in in.
Flush pushbutton	62	2.44
Pilot light	64	2.52
Illuminated pushbutton	65.5	2.58
Projecting pushbutton	66	2.60
Selector switch	80	3.15
Mushroom head pushbutton	91.5	3.58
Latching mushroom head Emergency stop pushbutton wit h key	115	4.53
Key switch	105.5	4.15